Service manual

(Light Commercial 50Hz R410A)

Contents

Part 1 General description 3

Part 2 Indoor unit 7

Part 3 Universal outdoor unit 138

Part 4 Trouble shooting.....178

Part 5 Controller 208

Part 6 Sensor resistance table 217

Part 1 General description

Nomenclature

Indoor Unit

A L CA - H 24 / 4 D R1 A

- Design Series Code
- Refrigerant Type:
  R1: R410a . R22 Omitted
- D: DC Inverter On/Off Omitted
- Power Supply:
  4:220-240V~, 1Ph, 50Hz
  5:380-415V~, 3Ph, 50Hz
- Cooling Capacity (24,000Btu/h)
- H: Cooling & Heating C: Cooling Only
- Indoor Unit Type:
  CA: Four-Way Cassette CF: Ceiling&Floor
  LD: Low ESP Duct MD: Mid ESP Duct
  HD: High ESP Duct SD: Slim Duct
- Light Cmmercial AC
- AUX

Outdoor Unit

A L - H 24 / 4 D R1 (U) A

- Design Series Code
- Outdoor Unit Type:
  U: Universal Outdoor unit
  SD: Slim Duct Outdoor unit
- Refrigerant Type:
  R1: R410a R22 Omitted
- D: DC Inverter On/Off Omitted
- Power Supply:
  4: 220-240V~, 1Ph, 50Hz
  5: 380-415V~, 3Ph, 50Hz
- Cooling Capacity (24,000Btu/h)
- H: Cooling & Heating C: Cooling Only
- Light Commercial AC
- AUX

Unit appearance

Series	Picture of the indoor unit					
Four-way Cassette						
	12k Btu/h	18k Btu/h	24k Btu/h	36k Btu/h	48k Btu/h	60k Btu/h
Ceiling &Floor						
	12k Btu/h	18k Btu/h	24k Btu/h	36k Btu/h	48k Btu/h	60k Btu/h
Low ESP Duct						
	12k Btu/h					
Mid ESP Duct						
	18k Btu/h	24k Btu/h	36k Btu/h	48k Btu/h	60k Btu/h	
High ESP Duct						
	24k Btu/h		36k Btu/h	48k Btu/h	60k Btu/h	

Cooling capacity (Btu/h)	12k Btu/h	18 k Btu/h	24 k Btu/h	36 k Btu/h	48 k Btu/h	60 k Btu/h
Universal outdoor unit						

Part 2. Indoor unit

Four-way cassette 7

Ceiling & floor type 36

Low static pressure duct type 64

Middle static pressure duct type 81

High static pressure duct type 112

Four-way cassette

1.Feature.....8

2.Specfication 10

3.Capacity Amendment.....16

4.Demension 18

5.Electrical wiring and connection.....19

6.Installation.....26

7.Explode view.....31

1Feature

Four-way cassette type air conditioner (Cooling-only or heat pump), is installed under the ceiling, compared with Floor &Standing type A/C, it has following advantages: saving room space; Ceiling installation combining with the decoration, makes the room more elegant; Flexible installation in anywhere in the ceiling and 4-direction blowing, makes the indoor temperature is even and makes you feel more comfortable, so Cassette type A/C is a perfect replacing Product of Floor & Standing type A/C.

Application occasions:

Small super market, restaurant, office, meeting room, villa meeting room, family bedroom and so on, and it can even be used as the updating Product for modern residential A/C.

Features:

◇Concealed design, ceiling installation, room space saving, it is very suitable for family or office occasion;

◇With Setting or Auto two operation modes, four-way blowing, strong circulating wind, multi wind speed, the cooling or heating capacity can reach to each corner of the room;

◇One-step formed shell by mold, appearance is elegant;

◇Special insulation design, achieves high heat insulation efficiency, and no condensation on shell;

◇Built-in drain pump, drain-head height is up to 1.2meters, creating the ideal solution for perfect water drainage, also construction and installation is much easier and convenient;

◇Long term air filter, wash period is two times longer than normal filter, and maintenance is free;

◇3D helix air blade ensures the air flow sufficiently, reduces the unit thickness, and reduces the operation noise greatly;

◇Plastic drip tray adopts innovative foam-PS combined with plastic technical, the thickness of plastic reaches 1mm, avoid any leakage;

◇6 segments heat exchanger, increase exchanging area, the efficiency of heat exchanging increased by 10%~15%;

◇Ingenious hook design, the panel is convenient to install or remove;

◇Fresh air intake design, leading in fresh air to improve indoor air quality anytime;

◇3-phase power supply type units with low ambient temperature cooling function, which makes the unit can run normally on the condition that the ambient temperature falls down to -15℃;

◇Auto-restart function;

◇Standard remote controller and optional wired controller;

◇Auxiliary electric heater for heat pump unit, with fast heating and low ambient temperature heating functions;

◇Failure automatic detection, if there is a failure, the indicator will flash and the failure code will display on the wired controller, the failure cause is easier to be found.

Function introduction

Type	Item	ALCA-C(H)**R1					
		12/4	18/4	24/4	36/5	48/5	60/5
Protection	High pressure protection	—	—	—	●	●	●
	Low pressure protection	—	—	—	●	●	●
	Compressor overloading protection	●	●	●	●	●	●
	High exh. temperate protection	—	—	—	●	●	●
	Phase protection(Phase-loss, phase- reverse)	—	—	—	●	●	●
	Over-heating protection	●	●	●	●	●	●
	Anti-freezing protection	●	●	●	●	●	●
	Sensor failure alarm	●	●	●	●	●	●
	Failure code display	●	●	●	●	●	●
Comfort	Cooling	●	●	●	●	●	●
	Heating	●	●	●	●	●	●
	3-Speed	●	●	●	●	●	●
	Adjustable ESP	—	—	—	—	—	—
	Auto-restart(Optional)	●	●	●	●	●	●
	Anti-cold wind	●	●	●	●	●	●
	Afterheat wind blowing	●	●	●	●	●	●
	Timing ON/OFF	●	●	●	●	●	●
Operation	Time display	●	●	●	●	●	●
	Operation mode display	●	●	●	●	●	●
	Fan speed display	●	●	●	●	●	●
	Defrost display	●	●	●	●	●	●
	Timing ON/OFF display	●	●	●	●	●	●
	Wind angle display	●	●	●	●	●	●
	Sleeping mode display	●	●	●	●	●	●
Running	Auto start	●	●	●	●	●	●
	Dehumidifying	●	●	●	●	●	●
	Auto defrost	●	●	●	●	●	●
	Ventilation function	●	●	●	●	●	●
	Low ambient temperature cooling	●	●	●	●	●	●
Health	Washable air filter	●	●	●	●	●	●
	Fresh air interface	●	●	●	●	●	●
Installation	Left/right drainage(optional)	—	—	—	—	—	—
	Left/right pipe connection(optional)	—	—	—	—	—	—
	Down/back air suction(optional)	—	—	—	—	—	—
	Installation indicating board	●	●	●	●	●	●

Remarks: ● Stands for “YES” — Stands for “NO”

2. Specfication

Model	Indoor		ALCA-C12/4R1	ALCA-H12/4R1	ALCA-C18/4R1
	Panel		MB13	MB13	MB13
	Outdoor		AL-C12/4R1(U)	AL-H12/4R1(U)	AL-C18/4R1(U)
Factory Model	Indoor		ALCa-12A4/R1-C7	ALCa-H12A4/R1-C7	ALCa-18A4/R1-C7
	Panel		MB13	MB13	MB13
	Outdoor		AL-12A4/R1(T)	AL-H12A4/R1(T)	AL-18A4/R1(T)
Power Supply		V~,Hz, Ph	220~240,50,1	220~240,50,1	220~240,50,1
Capacity	Cooling	Btu/h	12000	12000	18000
		KW	3.6	3.6	5.3
	Heating	Btu/h	/	13500	/
		W	/	3.9	/
Electric Data	Rated Cooling Power Input	KW	1.19	1.19	1.76
	Rated Heating Power Input	KW	/	1.20	/
	Rated Cooling Current	A	5.45	5.45	8.05
	Rated Heating Current	A	/	5.49	/
Performance	EER	W/W	3.03	3.03	3.01
	COP	W/W	/	3.25	/
Indoor Fan Motor	Model		YDK30-6E1	YDK30-6E1	YDK30-6E1
	Brand		TELING	TELING	TELING
	Output Power x Fan quantity	W	30*1	30*1	30*1
	Capacitor	uF	1.5	1.5	2.5
	Speed (Hi/Mi/Lo)	r/min	920/850/750	920/850/750	920/850/750
Indoor Coil	Number Of Row		2	2	2
	Tube Pitch(a)x Row Pitch(b)	mm	20.5×12.7	20.5×12.7	20.5×12.7
	Fin Pitch	mm	1.5	1.5	1.4
	Fin Material		Hydrophilic aluminum fin		
	Tube Outside Dia.and Material	mm	φ7,Inner grooved	φ7,Inner grooved	φ7,Inner grooved
	Coil Length x Height x Width	mm	1160×164×25.4	1160×164×25.4	1160×164×25.4
	Heat Exchanging Area	m^2	4.34	4.34	5.76
Indoor Unit	Indoor Air Flow (Hi/Mi/Lo)	m^3/h	620/496/434	620/496/434	900/720/630
	Noise Level(Hi/Mi/Lo)	dB(A)	41/38/32	41/38/32	41/38/32
	Net Dimension (W*H*D)	mm	615×615×263	615×615×263	615×615×263
	Packing Dimension (W*H*D)	mm	700×700×330	700×700×330	700×700×330
	Net Weight	Kg	20	20	20
	Gross Weight	Kg	25	25	25
Panel	Net Dimension (W*H*D)	mm	650×650×55	650×650×55	650×650×55
	Packing Dimension (W*H*D)	mm	710×710×80	710×710×80	710×710×80
	Net weight	Kg	3	3	3
	Gross weight	Kg	5	5	5

Refrigerant Pipe	Liquid Side	mm	6.35	6.35	6.35
	Gas Side	mm	12.7	12.7	12.7
	Max. Refrigerant Pipe Length	m	15	15	20
	Max. Difference In Level	m	10	10	15
Operation Temperature Range		℃	16~32	16~32	16~32
Ambient Temperature Range(Cooling/Heating)		℃	-5~49	-5~49/-15~24	-5~49
Application Area		m^2	13-21	13-21	21-35
Connection Wiring	Power Wiring(Indoor)	mm^2	3×1.5mm^2	3×1.5mm^2	3×2.5mm^2
	Power Wiring(Outdoor)	mm^2	/	/	/
	Signal Wiring	mm^2	3×1.5mm^2+1mm^2	3×1.5mm^2+2×1mm^2	3×2.5mm^2+1mm^2
Wireless Remote Controller			YKR-H/009E	YKR-H/009E	YKR-H/009E
Qty'per 20'& 40'&40HQ(Only For Reference)		Set	61/132/167	61/132/167	54/112/135

Note:

1. Working condition of the cooling capacity measured: Inside the room DB temperature 27℃,WB temperature19℃;Outside of the room DB temperature 35℃,WB temperature 24℃;Working condition of the heating capacity measured:Inside the room DB temperature 20℃,Outside of the room DB temperature 7℃,WB temperature 6℃.
2. Parameters above are all measured when the connecting pipe is 5 meters.
3. Parameters above may be modified as product improvement. We keep the right to change the product specifications without prior notice, please take the parameters listed on the nameplate as criterion.

Model	Indoor		ALCA-H18/4R1	ALCA-C24/4R1	ALCA-H24/4R1
	Panel		MB13	MB12	MB12
	Outdoor		AL-H18/4R1(U)	AL-C24/4R1(U)	AL-H24/4R1(U)
Factory Model	Indoor		ALCa-H18A4/R1-C7	ALCa-24B4/R1-C7	ALCa-H24B4/R1-C7
	Panel		MB13	MB12	MB12
	Outdoor		AL-H18A4/R1(T)	AL-24B4/R1(T)	AL-H24B4/R1(T)
Power Supply		V~,Hz, Ph	220~240,50,1	220~240,50,1	220~240,50,1
Capacity	Cooling	Btu/h	18000	24000	24000
		KW	5.3	7.2	7.2
	Heating	Btu/h	20000	/	27500
		W	5.8	/	8.1
Electric Data	Rated Cooling Power Input	KW	1.76	2.39	2.39
	Rated Heating Power Input	KW	1.80	/	2.50
	Rated Cooling Current	A	8.05	10.94	10.94
	Rated Heating Current	A	8.24	/	11.49
Performance	EER	W/W	3.01	3.01	3.01
	COP	W/W	3.22	/	3.24
Indoor Fan Motor	Model		YDK30-6E1	YDK30-6 Q	YDK30-6 Q
	Brand		TELING	HUATE	HUATE
	Output Power x Fan quantity	W	30*1	30*1	30*1
	Capacitor	uF	2.5	3	3
	Speed (Hi/Mi/Lo)	r/min	920/850/750	500/400/320	500/400/320

Indoor Coil	Number Of Row		2	2	2
	Tube Pitch(a)x Row Pitch(b)	mm	20.5×12.7	20.5×12.7	20.5×12.7
	Fin Pitch	mm	1.4	1.6	1.6
	Fin Material		Hydrophilic aluminum fin		
	Tube Outside Dia.and Material	mm	φ7,Inner grooved	φ7,Inner grooved	φ7,Inner grooved
	Coil Length x Height x Width	mm	1160×164×25.4	2142×205×25.4	2142×205×25.4
	Heat Exchanging Area	m^2	5.76	10.02	10.02
Indoor Unit	Indoor Air Flow (Hi/Mi/Lo)	m^3/h	900/720/630	1300/1040/910	1300/1040/910
	Noise Level(Hi/Mi/Lo)	dB(A)	41/38/32	45/42/36	45/42/36
	Net Dimension (W*H*D)	mm	615×615×263	835×835×240	835×835×240
	Packing Dimension (W*H*D)	mm	700×700×330	910×910×320	910×910×320
	Net Weight	Kg	20	27	27
	Gross Weight	Kg	25	34	34
Panel	Net Dimension (W*H*D)	mm	650×650×55	950×950×55	950×950×55
	Packing Dimension (W*H*D)	mm	710×710×80	1000×1000×100	1000×1000×100
	Net weight	Kg	3	5	5
	Gross weight	Kg	5	7	7
Refrigerant Pipe	Liquid Side	mm	6.35	9.52	9.52
	Gas Side	mm	12.7	15.88	15.88
	Max. Refrigerant Pipe Length	m	20	30	30
	Max. Difference In Level	m	15	15	15
Operation Temperature Range		℃	16~32	16~32	16~32
Ambient Temperature Range(Cooling/Heating)		℃	-5~49/-15~24	-5~49	-5~49/-15~24
Application Area		m^2	21-35	28-47	28-47
Connection Wiring	Power Wiring(Indoor)	mm^2	3×2.5mm^2	/	/
	Power Wiring(Outdoor)	mm^2	/	3×4mm^2	3×4mm^2
	Signal Wiring	mm^2	3×2.5mm^2+2×1mm^2	3×1mm^2+2×1mm^2	3×1mm^2+3×1mm^2
Wireless Remote Controller			YKR-H/009E	YKR-H/009E	YKR-H/009E
Qty'per 20'& 40'&40HQ(Only For Reference)		Set	54/112/135	34/72/87	34/72/87

Note:

1. Working condition of the cooling capacity measured: Inside the room DB temperature 27℃,WB temperature19℃;Outside of the room DB temperature 35℃,WB temperature 24℃;Working condition of the heating capacity measured:Inside the room DB temperature 20℃,Outside of the room DB temperature 7℃,WB temperature 6℃。
2. Parameters above are all measured when the connecting pipe is 5 meters.
3. Parameters above may be modified as product improvement. We keep the right to change the product specifications without prior notice, please take the parameters listed on the nameplate as criterion.

Model	Indoor		ALCA-C36/5R1	ALCA-H36/5R1	ALCA-C48/5R1
	Panel		MB12	MB12	MB12
	Outdoor		AL-C36/5R1(U)	AL-H36/5R1(U)	AL-C48/5R1(U)
Factory Model	Indoor		ALCa-36A5/R1-C7	ALCa-H36A5/R1-C	ALCa-48A5/R1-C7

				7	
	Panel		MB12	MB12	MB12
	Outdoor		AL-36A5/R1(T)	AL-H36A5/R1(T)	AL-48A5/R1(T)
Power Supply		V~,Hz, Ph	380~415,50,3	380~415,50,3	380~415,50,3
Capacity	Cooling	Btu/h	36000	36000	48000
		KW	10.6	10.6	14.0
	Heating	Btu/h	/	40000	/
		W	/	11.7	/
Electric Data	Rated Cooling Power Input	KW	3.77	3.77	4.87
	Rated Heating Power Input	KW	/	3.50	/
	Rated Cooling Current	A	7.22	7.22	9.32
	Rated Heating Current	A	/	6.69	/
Performance	EER	W/W	2.81	2.81	2.87
	COP	W/W	/	3.34	/
Indoor Fan Motor	Model		YDK45-6 Q	YDK45-6 Q	YDK80-6-50 Q
	Brand		HUATE	HUATE	KANGBAO
	Output Power x Fan quantity	W	45*1	45*1	80*1
	Capacitor	uF	4	4	6
	Speed (Hi/Mi/Lo)	r/min	650/520/450	650/520/450	685/540/450
Indoor Coil	Number Of Row		2	2	2
	Tube Pitch(a)x Row Pitch(b)	mm	20.5×12.7	20.5×12.7	20.5×12.7
	Fin Pitch	mm	1.4	1.4	1.4
	Fin Material		Hydrophilic aluminum fin		
	Tube Outside Dia.and Material	mm	φ7,Inner grooved	φ7,Inner grooved	φ7,Inner grooved
	Coil Length x Height x Width	mm	2142×205×25.4	2142×205×25.4	2142×246×25.4
	Heat Exchanging Area	m^2	12.76	12.76	15.60
Indoor Unit	Indoor Air Flow (Hi/Mi/Lo)	m^3/h	1500/1200/1050	1500/1200/1050	1800/1440/1260
	Noise Level(Hi/Mi/Lo)	dB(A)	48/45/39	48/45/39	50/47/41
	Net Dimension (W*H*D)	mm	835×835×240	835×835×240	835×835×280
	Packing Dimension (W*H*D)	mm	910×910×320	910×910×320	910×910×360
	Net Weight	Kg	27	27	30
	Gross Weight	Kg	34	34	37
Panel	Net Dimension (W*H*D)	mm	950×950×55	950×950×55	950×950×55
	Packing Dimension (W*H*D)	mm	1000×1000×100	1000×1000×100	1000×1000×100
	Net weight	Kg	5	5	5
	Gross weight	Kg	7	7	7
Refrigerant Pipe	Liquid Side	mm	9.52	9.52	9.52
	Gas Side	mm	15.88	15.88	19.05
	Max. Refrigerant Pipe Length	m	50	50	50
	Max. Difference In Level	m	30	30	30

Operation Temperature Range		℃	16~32	16~32	16~32
Ambient Temperature Range(Cooling/Heating)		℃	-5~49	-5~49/-15~24	-5~49
Application Area		m^2	42-70	42-70	56-93
Connection Wiring	Power Wiring(Indoor)	mm^2	3×1mm^2	3×1mm^2	3×1mm^2
	Power Wiring(Outdoor)	mm^2	5×2.5mm^2	5×2.5mm^2	5×2.5mm^2
	Signal Wiring	mm^2	2×1mm^2	2×1mm^2	2×1mm^2
Wireless Remote Controller			YKR-H/009E	YKR-H/009E	YKR-H/009E
Qty'per 20'& 40'&40HQ(Only For Reference)		Set	30/64/77	30/64/77	20/42/44

Note:

1. Working condition of the cooling capacity measured: Inside the room DB temperature 27℃,WB temperature19℃;Outside of the room DB temperature 35℃,WB temperature 24℃;Working condition of the heating capacity measured:Inside the room DB temperature 20℃,Outside of the room DB temperature 7℃,WB temperature 6℃.
2. Parameters above are all measured when the connecting pipe is 5 meters.
3. Parameters above may be modified as product improvement. We keep the right to change the product specifications without prior notice, please take the parameters listed on the nameplate as criterion.

Model	Indoor		ALCA-H48/5R1	ALCA-C60/5R1	ALCA-H60/5R1
	Panel		MB12	MB12	MB12
	Outdoor		AL-H48/5R1(U)	AL-C60/5R1(U)	AL-H60/5R1(U)
Factory Model	Indoor		ALCa-H48A5/R1-C7	ALCa-60A5/R1-C7	ALCa-H60A5/R1-C7
	Panel		MB12	MB12	MB12
	Outdoor		AL-H48A5/R1(T)	AL-60A5/R1(T)	AL-H60A5/R1(T)
Power Supply		V~,Hz, Ph	380~415,50,3	380~415,50,3	380~415,50,3
Capacity	Cooling	Btu/h	48000	60000	60000
		KW	14.0	17.6	17.6
	Heating	Btu/h	53000	/	63500
		W	15.5	/	18.5
Electric Data	Rated Cooling Power Input	KW	4.87	6.28	5.71
	Rated Heating Power Input	KW	5.13	/	6.00
	Rated Cooling Current	A	9.32	12.02	12.02
	Rated Heating Current	A	9.82	/	11.48
Performance	EER	W/W	2.87	3.08	3.08
	COP	W/W	3.02	/	3.08
Indoor Fan Motor	Model		YDK80-6-50 Q	YDK80-6-50 Q	YDK80-6-50 Q
	Brand		KANGBAO	KANGBAO	KANGBAO
	Output Power x Fan quantity	W	80*1	80*1	80*1
	Capacitor	uF	6	6	6
	Speed (Hi/Mi/Lo)	r/min	685/540/450	685/540/450	685/540/450
Indoor Coil	Number Of Row		2	2	2
	Tube Pitch(a)x Row Pitch(b)	mm	20.5×12.7	20.5×12.7	20.5×12.7
	Fin Pitch	mm	1.4	1.4	1.4
	Fin Material		Hydrophilic aluminum fin		
	Tube Outside	mm	φ7,Inner grooved	φ7,Inner grooved	φ7,Inner grooved

	Dia.and Material				
	Coil Length x Height x Width	mm	2142×246×25.4	2142×246×25.4	2142×246×25.4
	Heat Exchanging Area	m^2	15.60	15.60	15.60
Indoor Unit	Indoor Air Flow (Hi/Mi/Lo)	m^3/h	1800/1440/1260	1800/1440/1260	1800/1440/1260
	Noise Level(Hi/Mi/Lo)	dB(A)	50/47/41	50/47/41	50/47/41
	Net Dimension (W*H*D)	mm	835×835×280	835×835×280	835×835×280
	Packing Dimension (W*H*D)	mm	910×910×360	910×910×360	910×910×360
	Net Weight	Kg	30	30	30
	Gross Weight	Kg	37	37	37
Panel	Net Dimension (W*H*D)	mm	950×950×55	950×950×55	950×950×55
	Packing Dimension (W*H*D)	mm	1000×1000×100	1000×1000×100	1000×1000×100
	Net weight	Kg	5	5	5
	Gross weight	Kg	7	7	7
Refrigerant Pipe	Liquid Side	mm	9.52	9.52	9.52
	Gas Side	mm	19.05	19.05	19.05
	Max. Refrigerant Pipe Length	m	50	50	50
	Max. Difference In Level	m	30	30	30
Operation Temperature Range		℃	16~32	16~32	16~32
Ambient Temperature Range(Cooling/Heating)		℃	-5~49/-15~24	-5~49	-5~49/-15~24
Application Area		m^2	56-93	64-107	64-107
Connection Wiring	Power Wiring(Indoor)	mm^2	3×1mm^2	3×1mm^2	3×1mm^2
	Power Wiring(Outdoor)	mm^2	5×2.5mm^2	5×2.5mm^2	5×2.5mm^2
	Signal Wiring	mm^2	2×1mm^2	2×1mm^2	2×1mm^2
Wireless Remote Controller			YKR-H/009E	YKR-H/009E	YKR-H/009E
Qty'per 20'& 40'&40HQ(Only For Reference)		Set	20/42/44	20/42/44	20/42/44

Note:

1. Working condition of the cooling capacity measured: Inside the room DB temperature 27℃,WB temperature19℃;Outside of the room DB temperature 35℃,WB temperature 24℃;Working condition of the heating capacity measured:Inside the room DB temperature 20℃,Outside of the room DB temperature 7℃,WB temperature 6℃。
2. Parameters above are all measured when the connecting pipe is 5 meters.
3. Parameters above may be modified as product improvement. We keep the right to change the product specifications without prior notice, please take the parameters listed on the nameplate as criterion.

3.Capacity Amendment

3.1 Running range

Cooling capacity (Btu/h)		12000	18000	24000	36000	48000	60000
Power supply		220-240V~/50Hz			380-415V 3N~/50Hz		
Voltage		187~242V			320~420V		
Ambient temperature	Cooling	-5~49℃					
	Heating	-15~24℃					

Amendment coefficient of cooling capacity under different indoor/outdoor DB/WB temperature

Indoor air inlet temperature℃		**Outdoor air inlet DB temperature℃**				
DB	**WB**	**25**	**30**	**35**	**40**	**43**
23	16	0.98	0.94	0.89	0.85	0.82
25	18	1.05	1	0.95	0.90	0.87
27	19	1.1	1.05	1	0.95	0.91
28	20	1.12	1.07	1.02	0.96	0.93
30	22	1.19	1.13	1.08	1.02	0.99
32	24	1.26	1.20	1.15	1.08	1.05

Actual cooling capacity calculation:
Actual cooling capacity=amendment coefficient of cooling capacity × nominal cooling capacity
——nominal cooling capacity could be found from the performance parameters list
——amendment coefficient of cooling capacity could be found from table above.

Amendment coefficient of heating capacity under different indoor/outdoor DB/WB temperature

Indoor air inlet DB temperature ℃	Outdoor air inlet WB temperature ℃				
	-5	0	6	10	15
16	0.65	0.80	1.02	1.13	-
18	0.61	0.76	1.02	1.12	-
20	0.6	0.75	1	1.11	1.25
21	0.59	0.72	0.99	1.1	1.24
22	0.58	0.71	0.97	1.09	1.23
24	0.56	0.7	0.96	1.08	1.22

Actual heating capacity calculation:
Actual heating capacity=amendment coefficient of heating capacity × nominal heating capacity
——nominal heating capacity could be found from the performance parameters list
——amendment coefficient of heating capacity could be found from table above.

Amendment coefficients of heating and cooling capacity under different height drop
Different Cooling Capacity modified coefficients at different height:

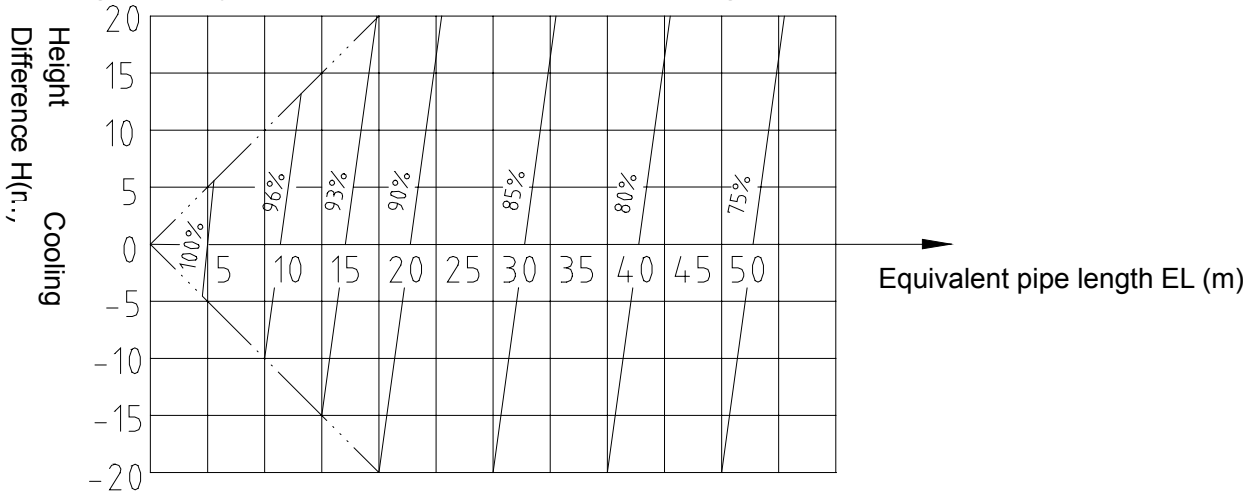

Note:
H = Height of Outdoor Unit — Height of Indoor Unit

Different Heating Capacity modified coefficients at different height:

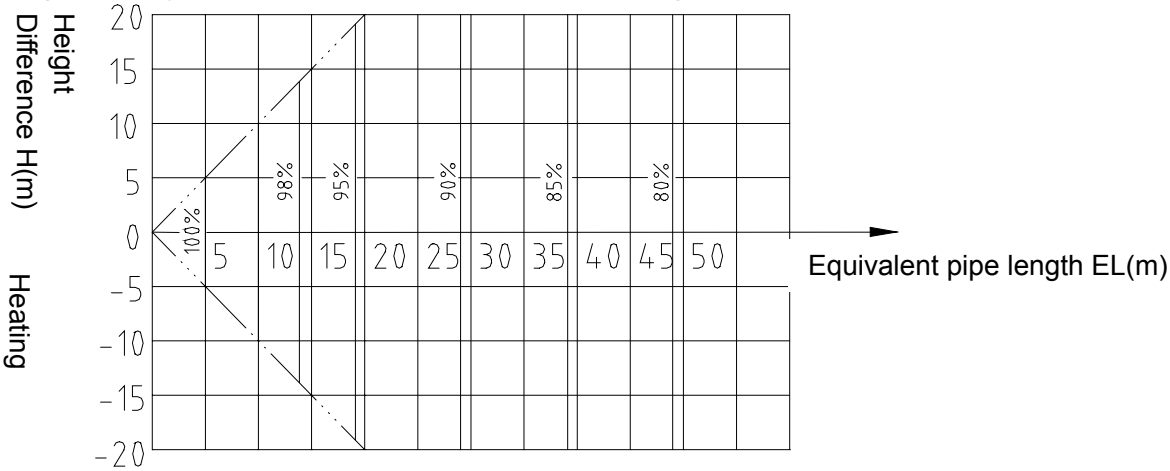

Note:
H = Height of Outdoor Unit — Height of Indoor Unit

4. Demension

ALCA-C(H)12/4R1, ALCA-C(H)18/4R1

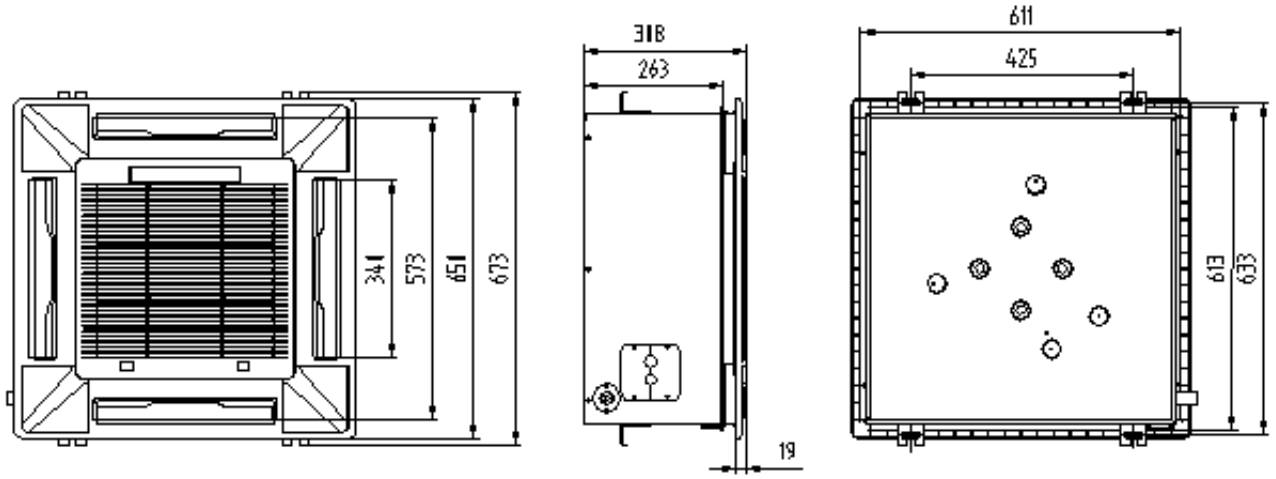

ALCA-C(H)24/4R1, ALCA-C(H)36/5R1

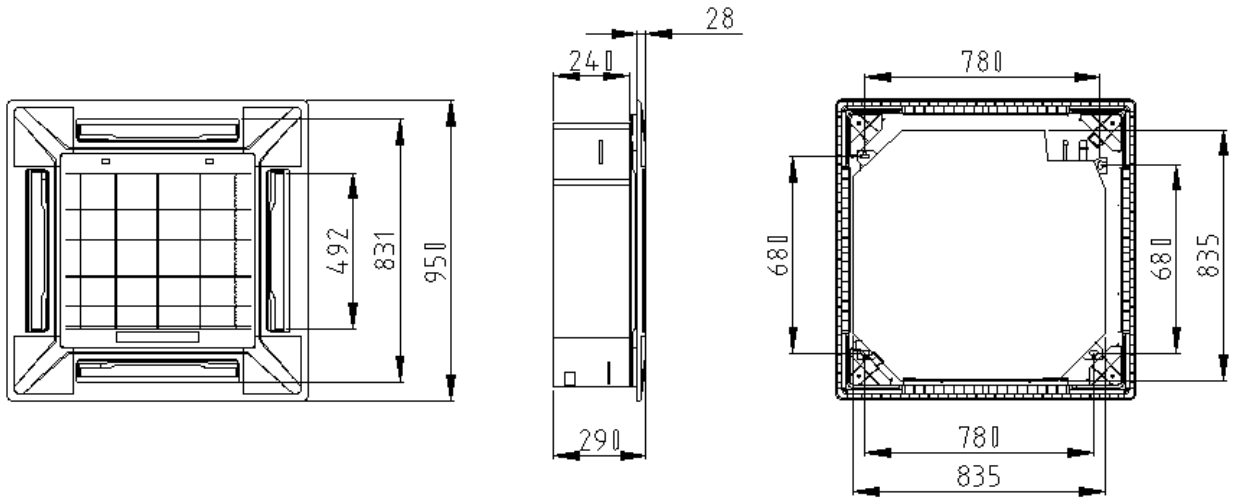

ALCA-C(H)48/5R1, ALCA-C(H)60/5R1

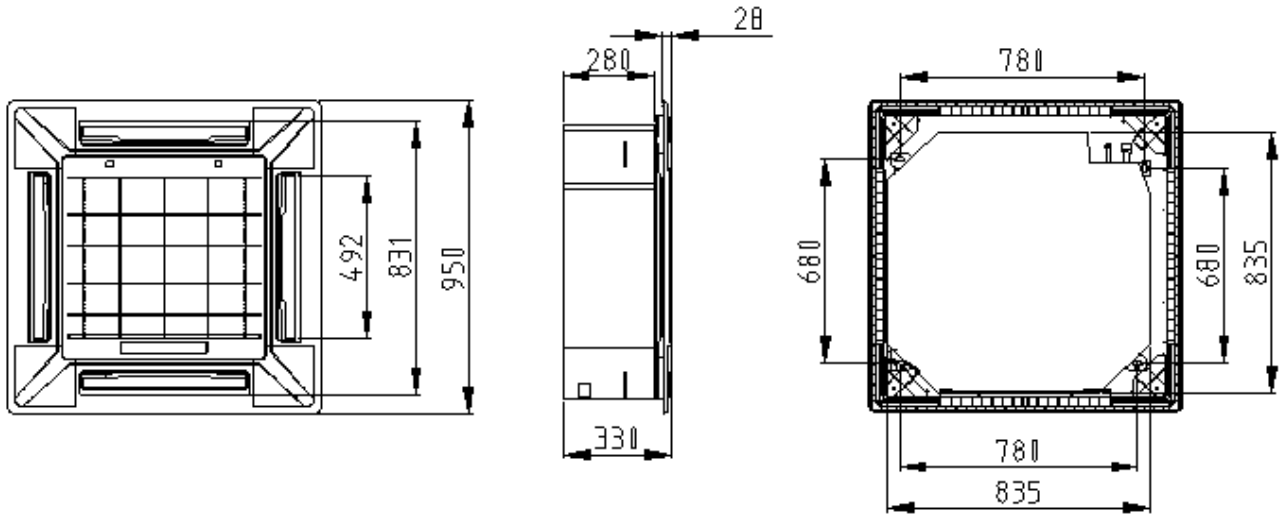

5. Electrical wiring and connection

ALCA-H12/4R1, ALCA-H18/4R1

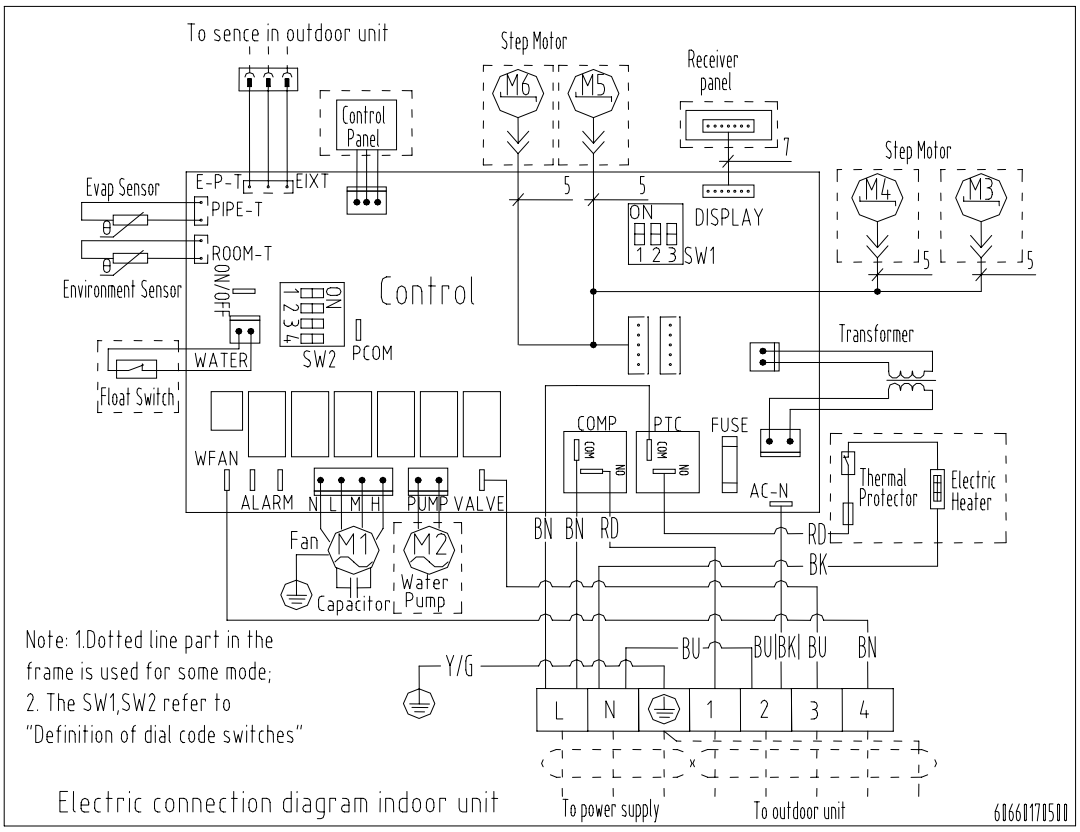

ALCA-C12/4R1, ALCA-C18/4R1

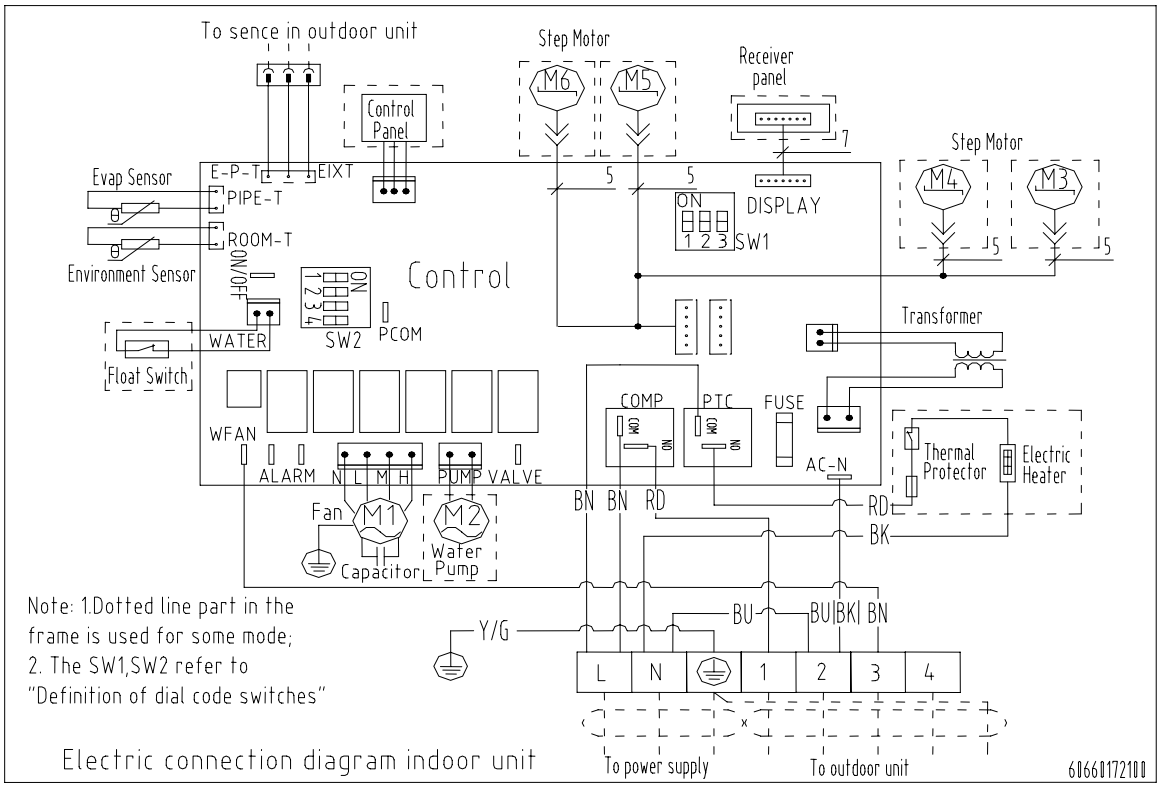

ALCA-H24/4R1

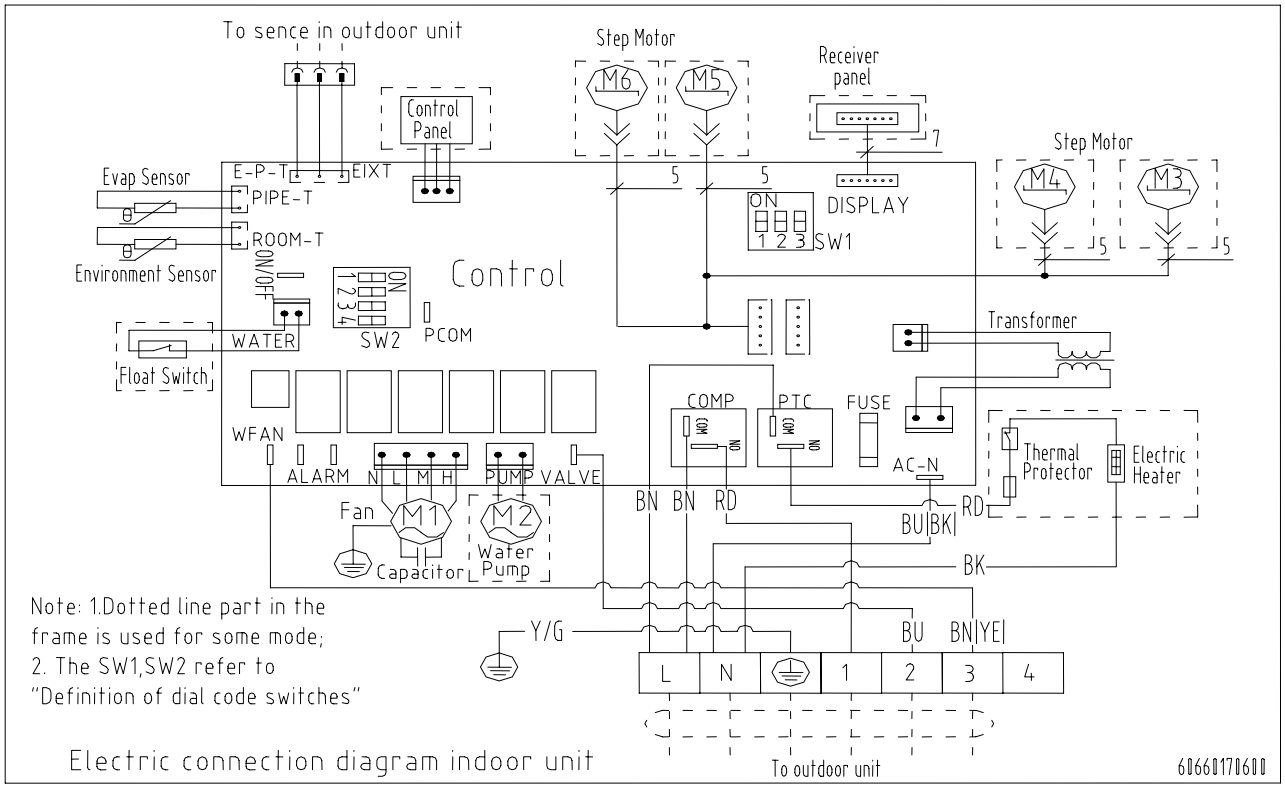

ALCA-C24/4R1

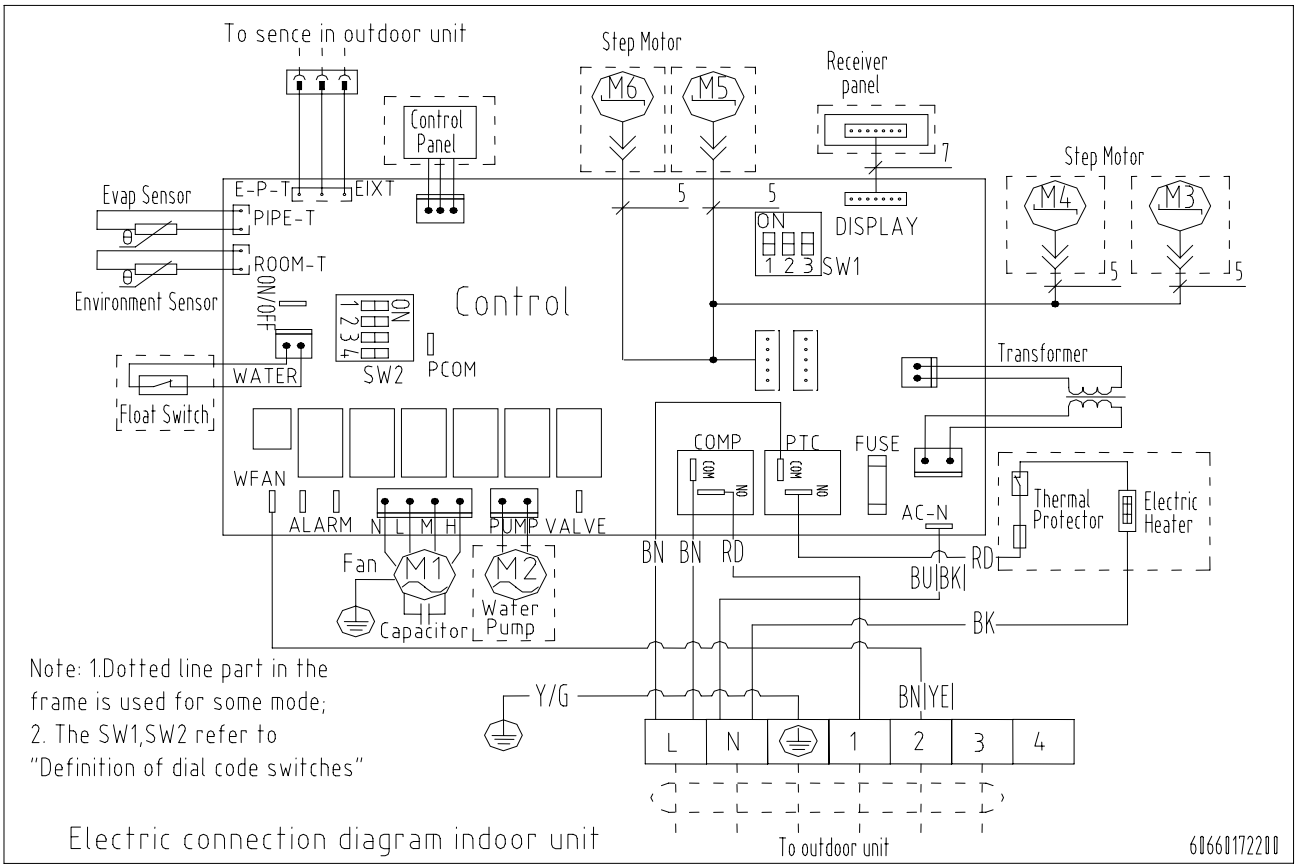

ALCA-C(H)36/5R1, ALCA-C(H)48/5R1, ALCA-C(H)60/5R1

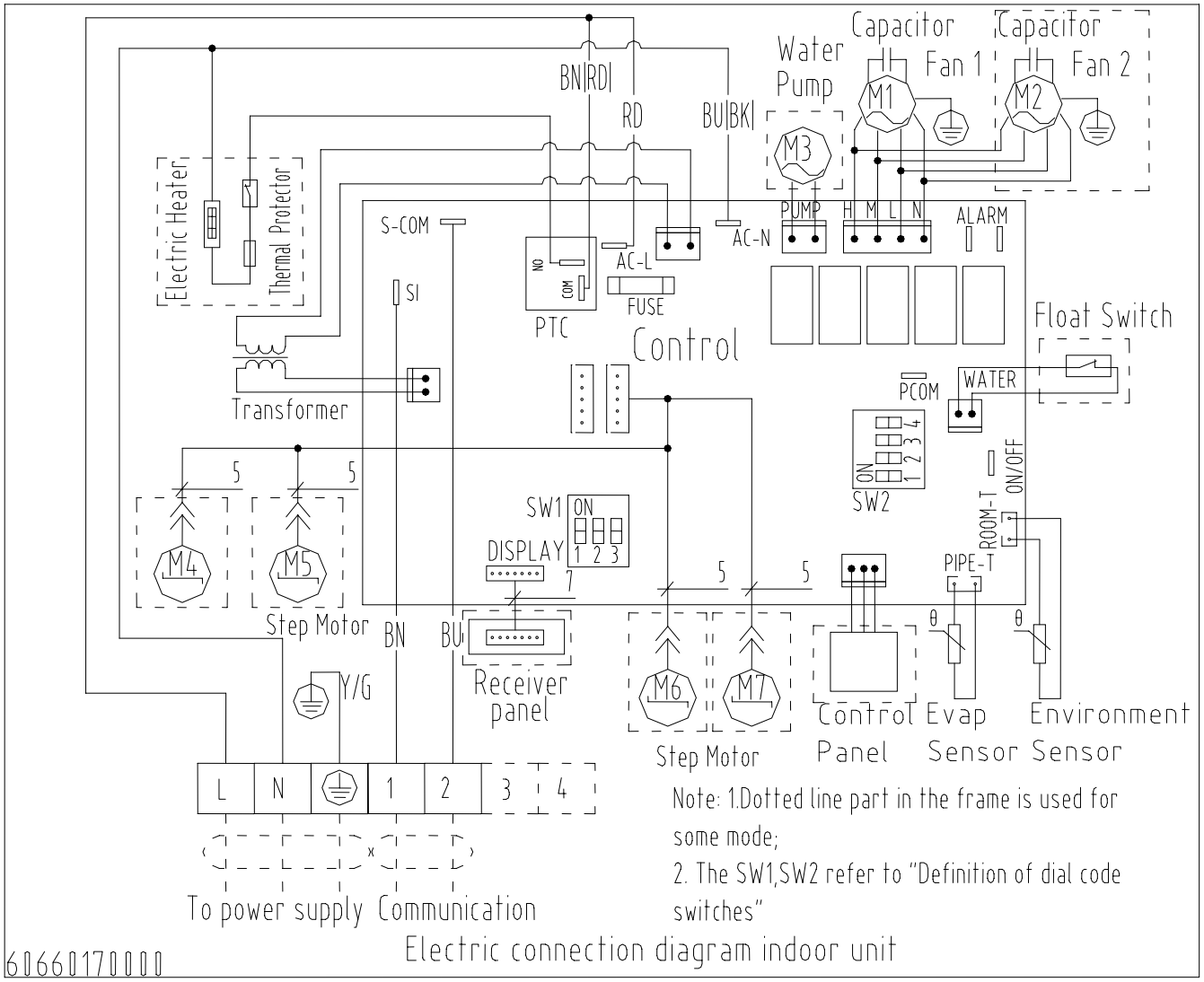

Electrical connection

ALCA-H12/4R1

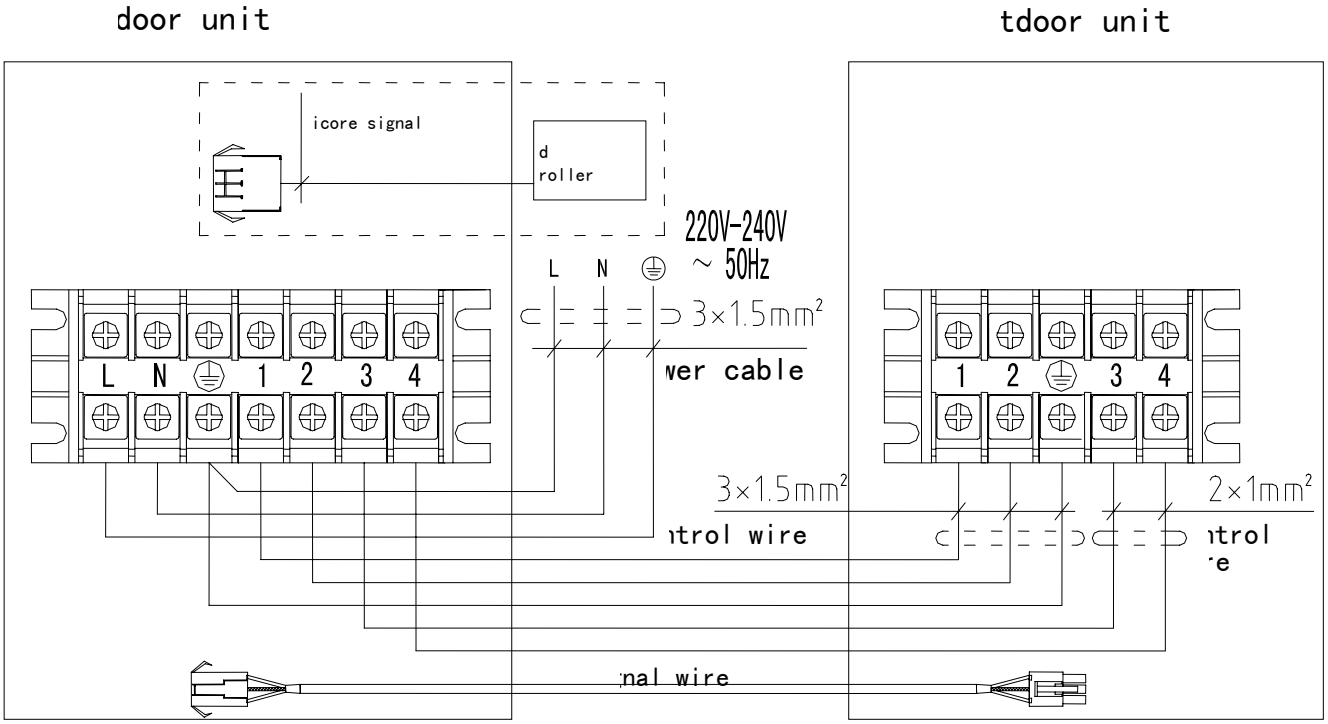

ALCA-C12/4R1

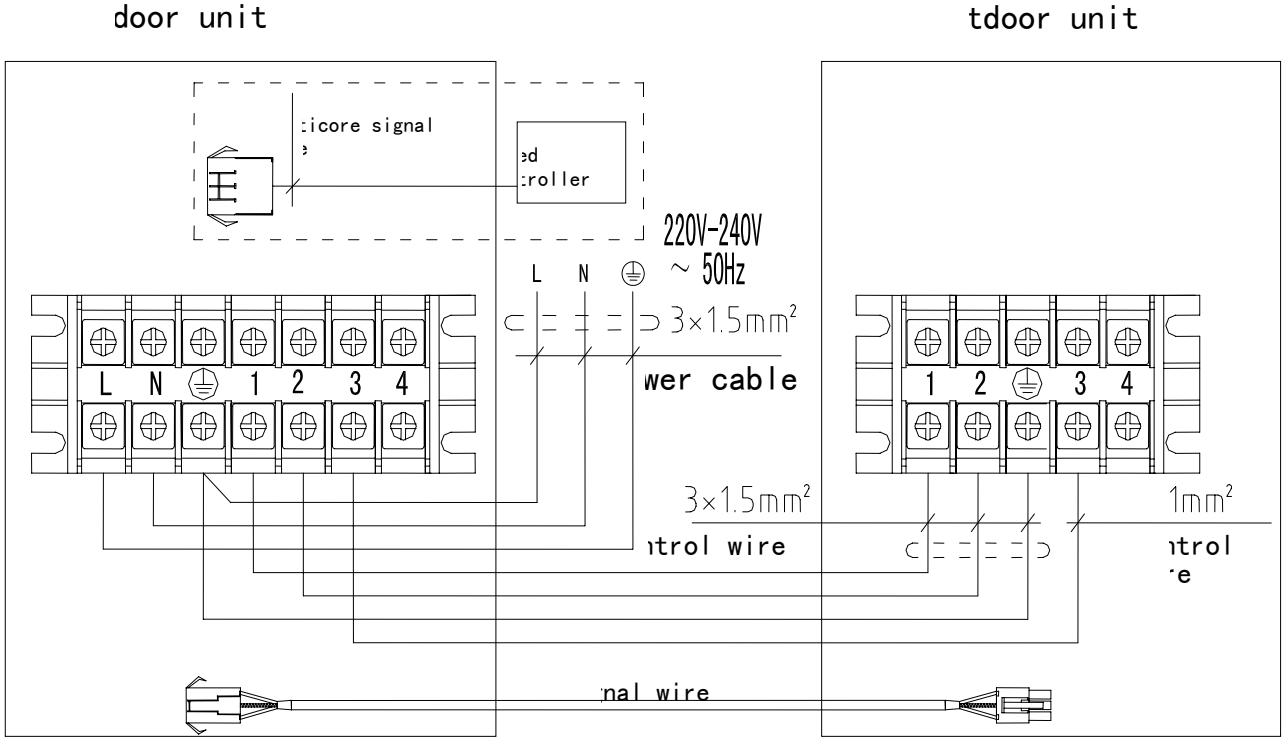

ALCA-H18/4R1

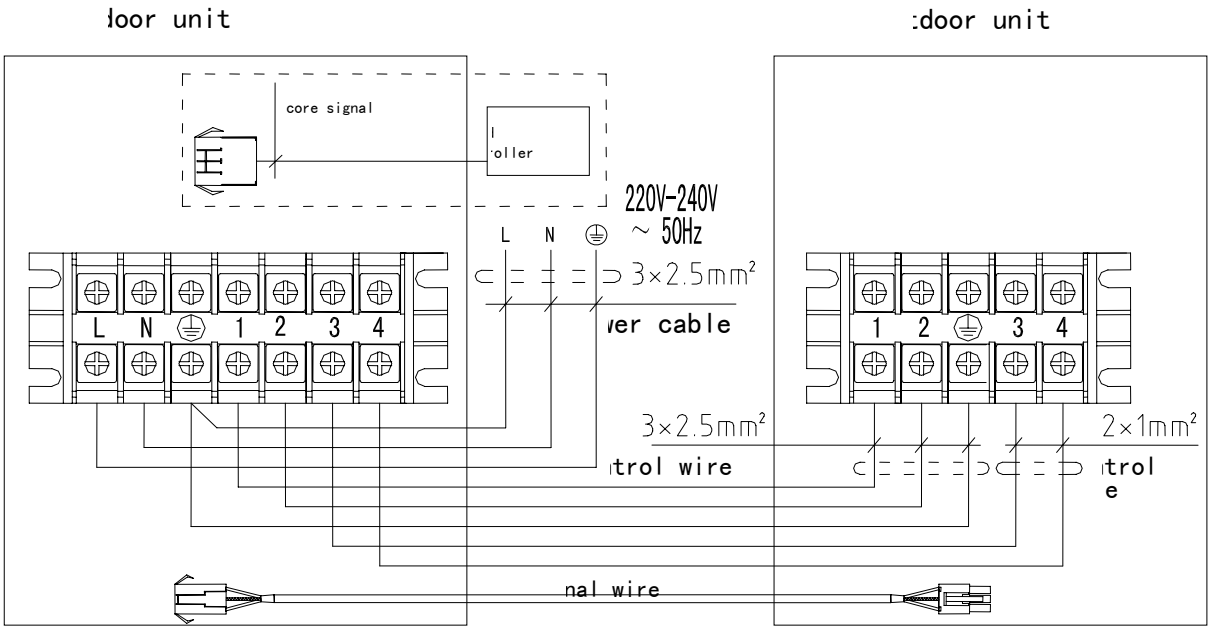

ALCA-C18/4R1

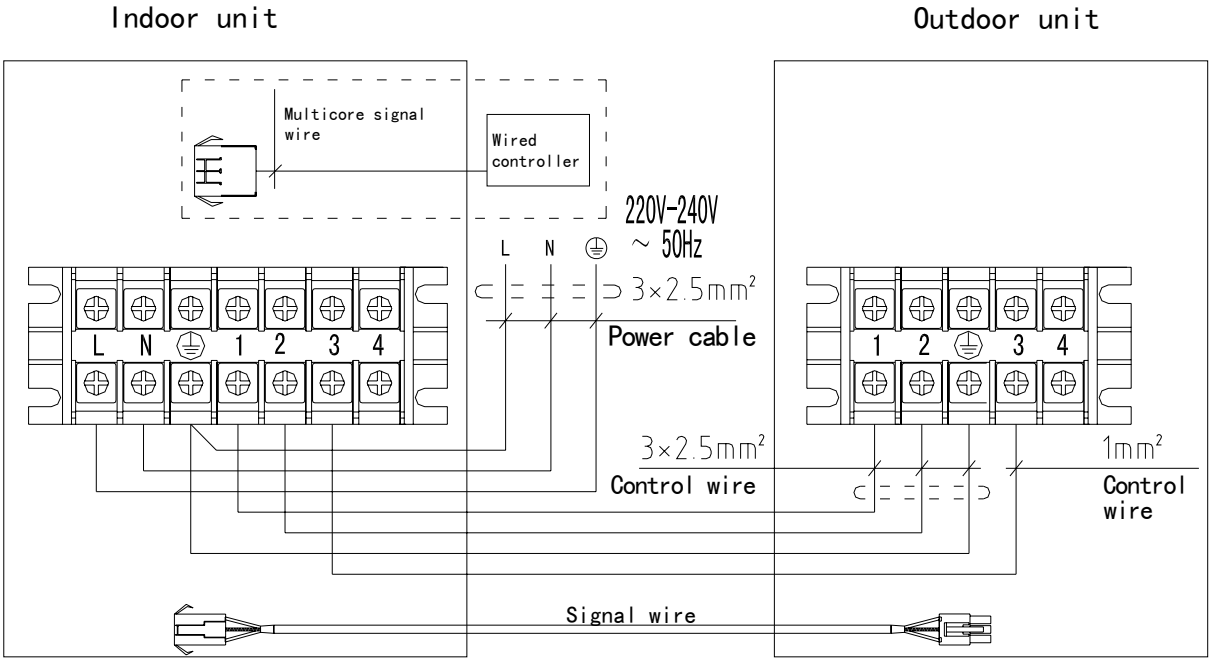

ALCA-H24/4R1

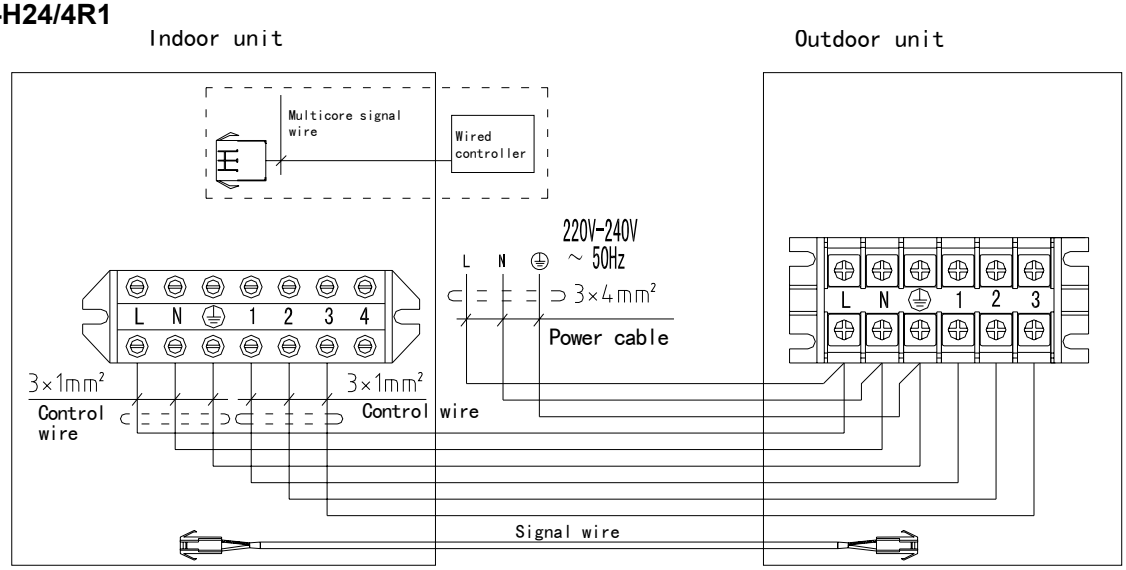

ALCA-C24/4R1

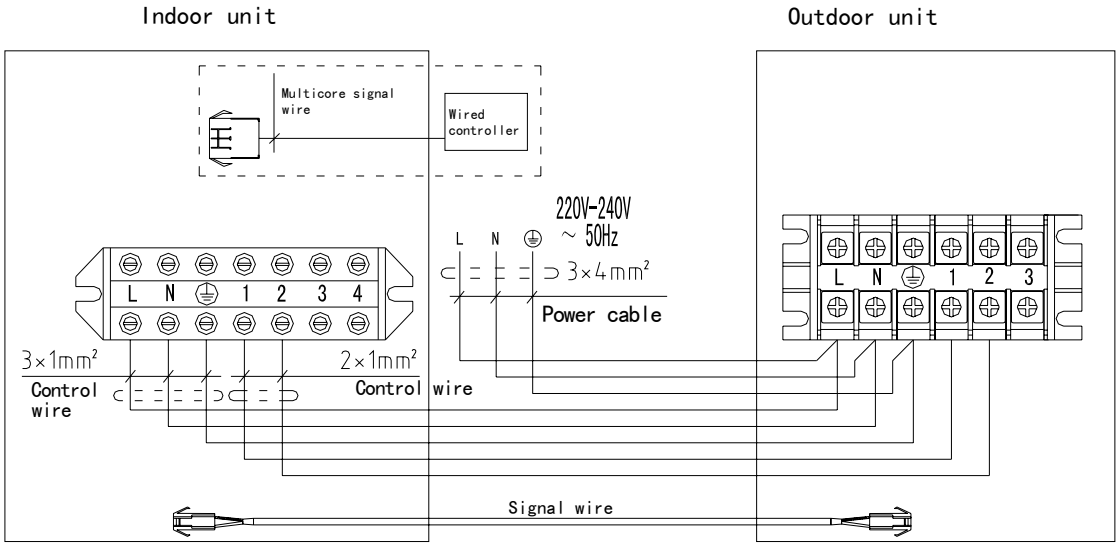

ALCA-C(H)36/5R1, ALCA-C(H)48/5R1, ALCA-C(H)60/5R1

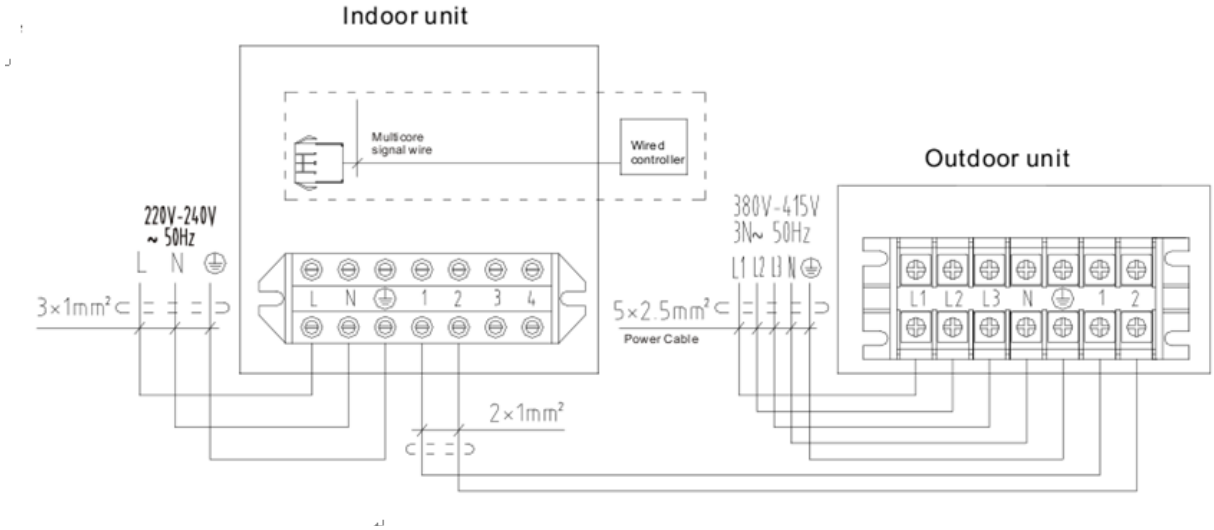

Introduction of Control Board sockets QRDL-3F(2S)-SYE1 (indoor unit) (match with the outdoor unit which the Power supply is 220V-240V, 1PH)

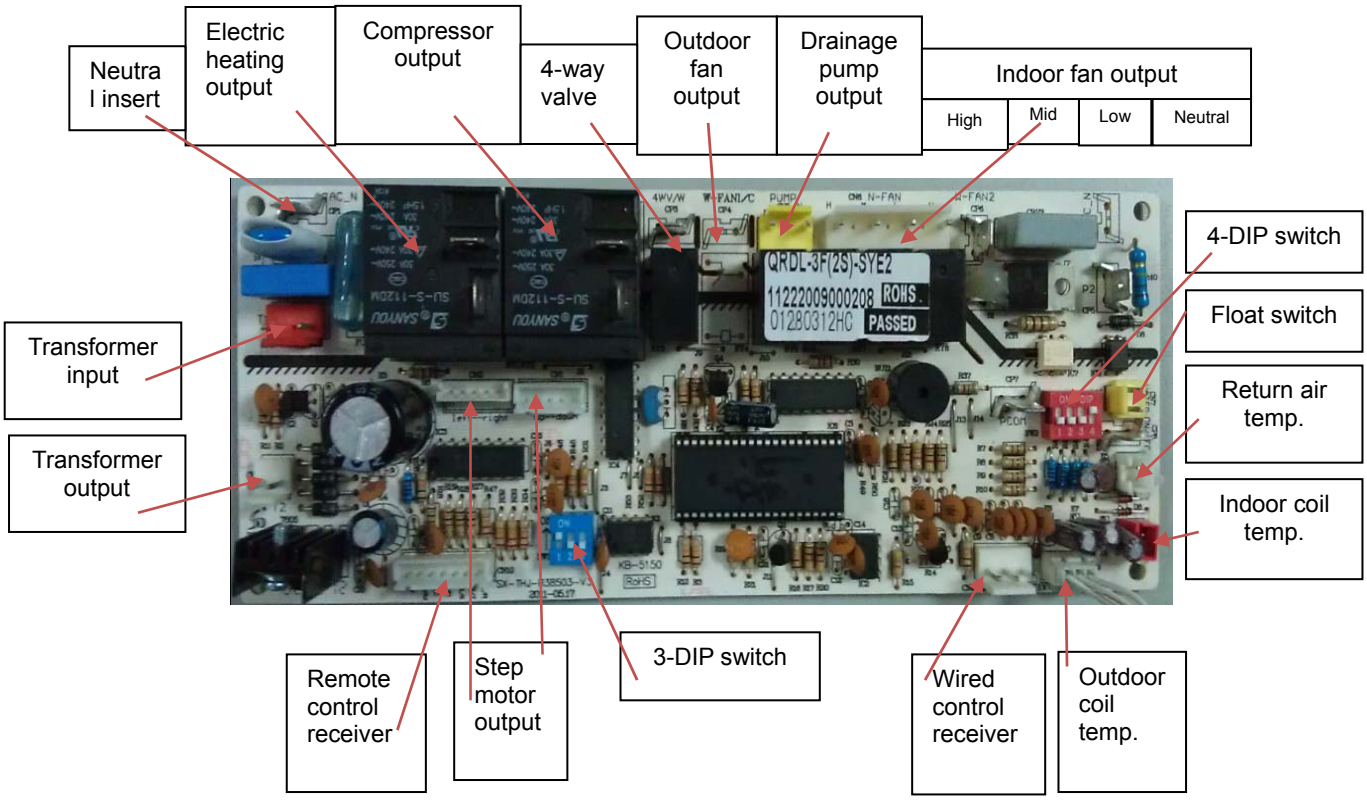

Introduction of control board QRD-SN3F(2S)-SYE1 sockets (Indoor unit) (match with the outdoor unit which the Power supply is 380V-415V, 3PH)

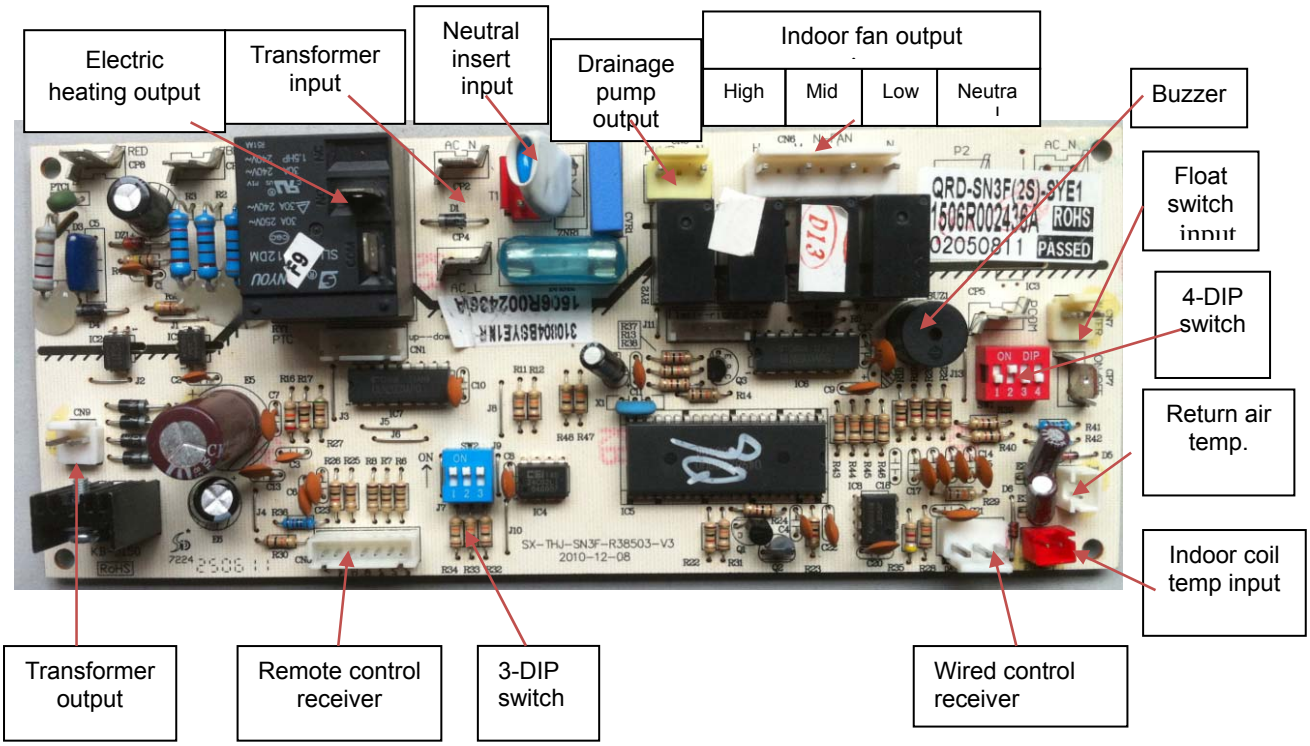

6 Installation

6.1 Preparation before installation

Please buy following spare parts from your local market before installation	Besides general implements, other implements are needed when connecting the pipe
Hung bolts M12, 4 pcs	Acetylene cylinders, oxygen cylinders (when longer pipe used it should be welded)
Drainage pipe PVC	One set pipe cut machine. (cut copper pipe)
Copper connecting pipe	Refrigerant cans, electronic balance (when longer pipe used additional gas should be charged)
Adhesive belt (big size) 5 pcs, (small size) 5 pcs	Pressure gauges, pipe clamp, welding torch, 2B silver electrode
Heat insulation material used to connect copper pipe (PE foam material, its thickness is more than 8mm)	Wrench 2 pcs, one of them is with adjustable torque wrench (42N.m,65N.m,100N.mm)
Power cable, electrical wire between indoor and outdoor unit(Must be in accordance with the wire diameter in the wiring diagram)	Nitrogen cylinder (in order to prevent oxidation when welding, using Nitrogen to replace the air)

6.2 Installation diagram

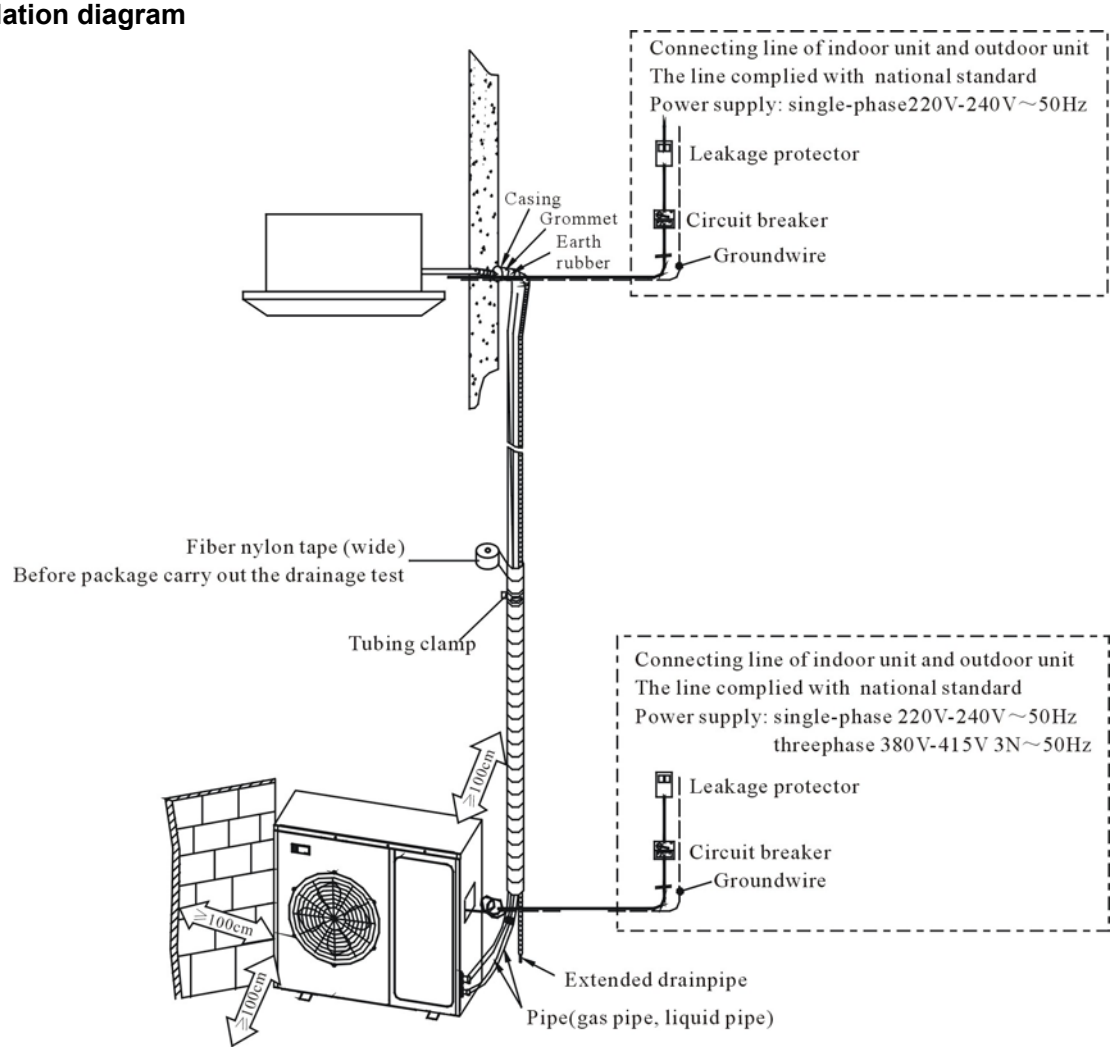

6.3 Installation precaution

◇ Hanging location should be able to support the unit's weight, there should be no increase in noise and vibration. If the hanging location needs reinforcement, it should be reinforced before installation;

◇ Choose the space above the ceiling that can put the indoor unit inside;

◇ The location should be easy for drainage;

◇ The unit should not be installed in the heat source, steam source oil mist places (such as machine room, kitchen, laundry room, mechanical workshop, etc.) in order to avoid performance degradation, electric shock, plastic parts corrosion which lead to unit broken;
◇ Choose the location at least 1 meter away from TV and radio, in order to avoid interference to them
◇ There is no obstacles getting in the way of air circulation, cold air can evenly spread to all corners of the room;
◇ In order to facilitate maintenance and repair, there should be certain distance between indoor unit and obstacles;
◇ Refrigerant R22 is used for this unit, which is non-flammable and non-toxic gas. As the proportion of refrigerant is bigger than air, so if it leaks the gas will be filled on the ground. Therefore, if the units mounted on a closed room there must be good ventilation to prevent suffocation. In case of leakage of refrigerant, units should immediately stop running, and contact with maintenance personnel in time. There must be no fire at the site, because the refrigerant will turn to harmful gas when get to the fire.

6.4 The distance between indoor unit and obstacle

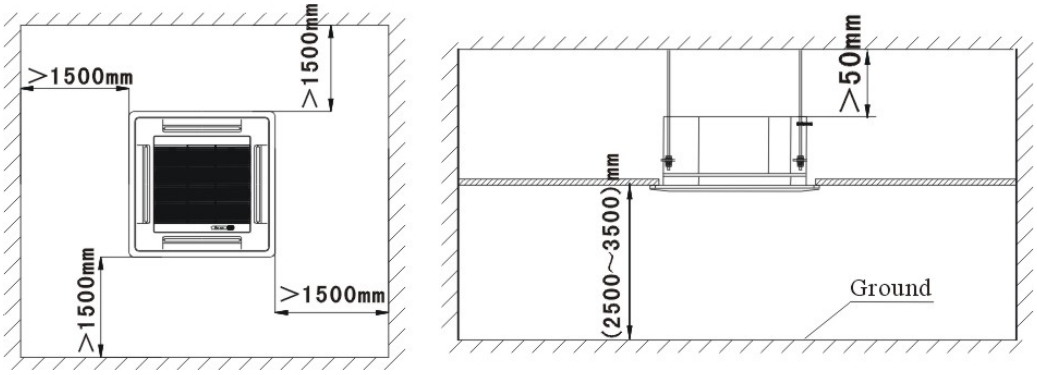

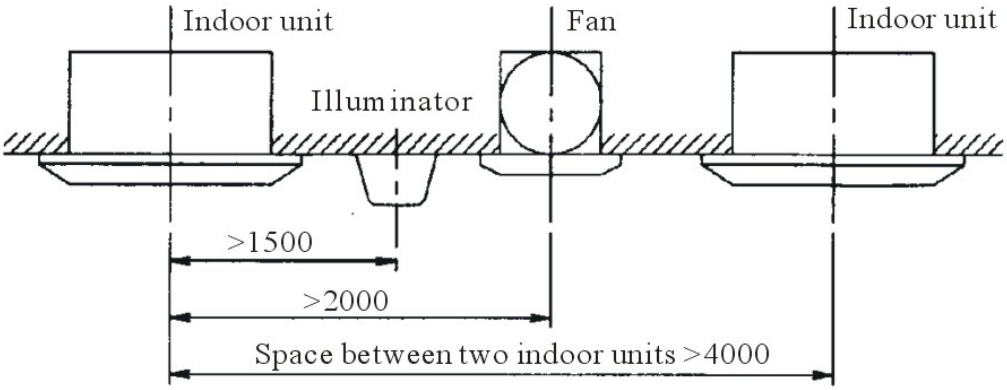

6.5 Indoor unit suspension

◇ Select the suspension foundation:
The suspension foundation is a structure of either wooden frame or reinforced concrete. It must be firm and reliable to bear at least 4 times weight of itself and capable of bearing vibration for long periods.
◇ Fixing of suspension foundation:
◇ Fix the suspension bolts either as shown in the picture or by a steel or wooden bracket.

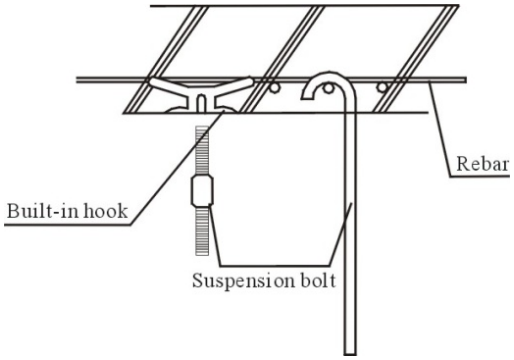

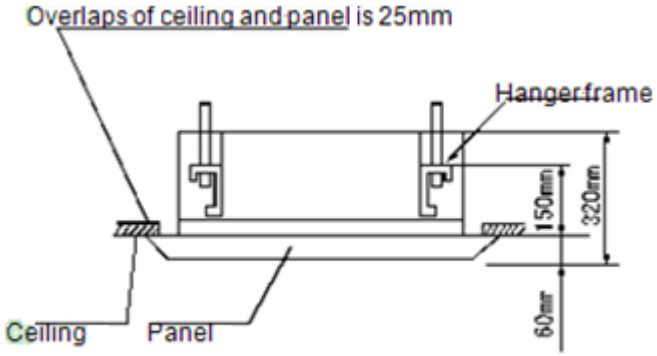

◇ If this unit is installed on a sloping ceiling, a cushion block should be installed between the ceiling and the air outlet panel, in order to ensure that the unit is installed on a level surface.
This is as shown in the drawing as follows:

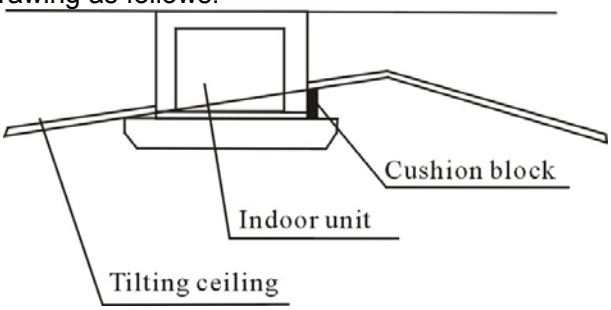

◇ Adjust the relative position of the suspension hook on the suspension bolt so that the unit can be in level position in all directions. Check with a level gauge after the installation is complete in order to ensure that the indoor unit is horizontal, otherwise it will cause water leakage, air leakage etc.
◇ Tighten the bolt and ensure that four hooks are in close contact with the nuts and washers, and the unit is suspended firmly and reliably onto the hooks.
◇ After the unit is installed ensure it is secure and does not shake or sway.
◇ Ensure that the centre of the indoor unit is in alignment with the centre of the opening in the ceiling.

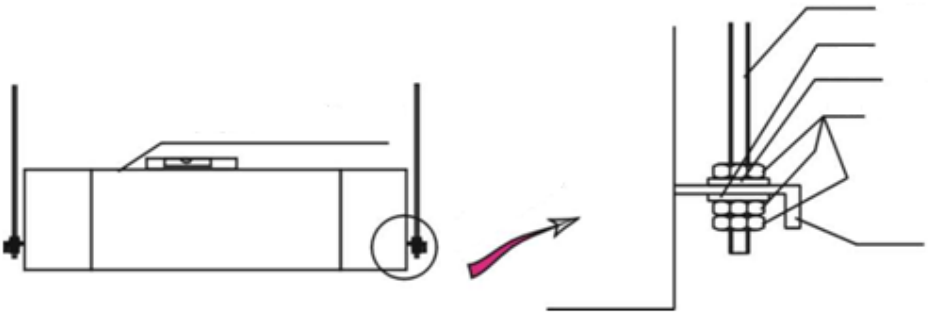

6.6 Drainage pipe installation

The drain pipe should be properly insulated to prevent the generation of condensation. Heat insulation material: the thickness of rubber insulation pipe should be more than 8mm

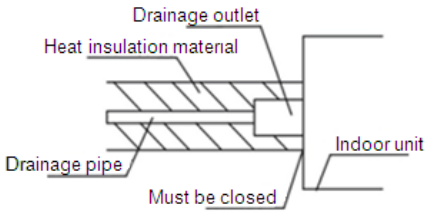

◇ Drainage pipe must have a downward gradient (1 / 50 1 / 100).If the drain pipe is installed ups and

downs, it will cause water backflow or leakage etc.

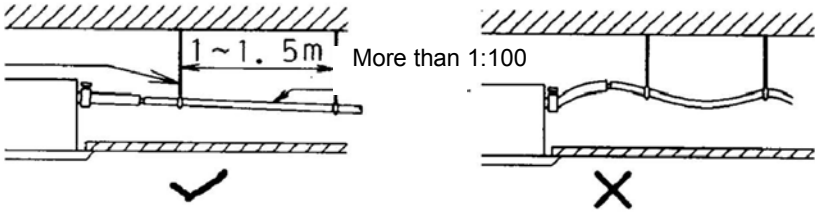

◇ The unit has a drain pump which will lift up to 1200mm. However after the pump stops the water still in the pipe will drain back and may overflow the drain tray causing a water leak. For this reason please install the drain pipe as shown

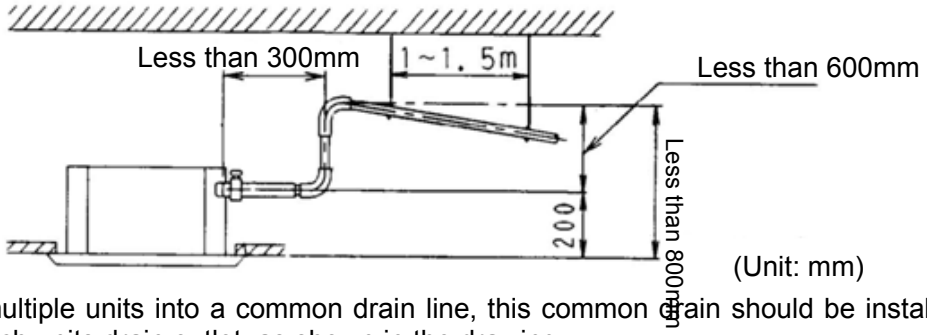

◇ When draining multiple units into a common drain line, this common drain should be installed about 100mm below each units drain outlet, as shown in the drawing.

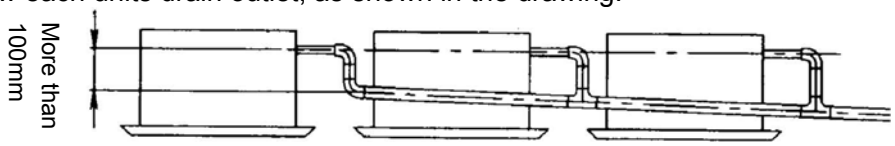

◇ When finish installation please carry out the drainage test to ensure that the water flow through the pipeline fluently, and carefully observe the junction to ensure that there is no water leakage. If the unit is installed in the newly built house, strongly recommend that this test taken before the ceiling installation. Even it is the heating only unit, this test is unavoidable.

6.7 Panel installation

As to the MB12 panel please refer to the following picture, the panel has four hooks which attach to corresponding hangers on the unit and the panel should be positioned using these first. The panel is then fixed into position by four bolts which are accessed through the four corner panels on the grille.

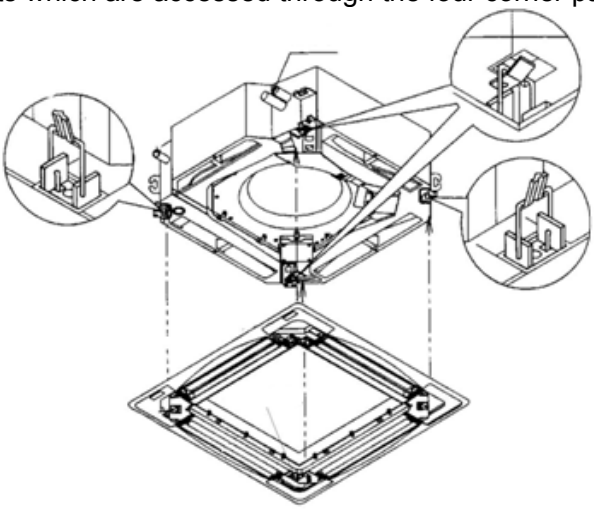

Notes:

When installing please ensure that the position of swing motor is in accordance with the position of the pipes of the unit.

6.8 Connect duct, fresh air ventilation

In order to meet different customers' requirements and their different usage environment, 3hp and 5hp indoor unit reserves one fresh air ventilation hole and four duct connection holes. The fresh air can be introduced from outside or through duct.

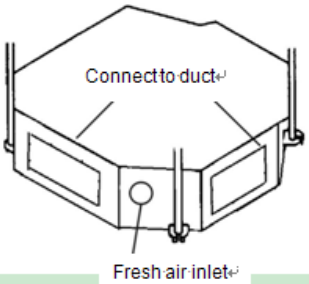

◇ Fresh air ventilation: In the corner of the unit there is a circular fresh air connection hole, if users want this feature, please cut down the circular metal sheet and connect it to the duct. Fresh air replacement hole is connected to the return air inlet of the indoor unit, when in the process of operation due to the negative pressure, the fresh air can be introduced from outside.

◇ Connect to duct: There are four rectangular connection holes on the four sides of the unit. If users what to connect it to the duct, please close the outlet to the side which needs connecting to the duct as well as cut down the rectangular metal sheet.

Notes:

1.Only under special usage that it is allowed to connect to duct pipe and the length of the duct pipe should be less than 5 meters.

2. Using the duct that can prevent frost and noise.

3. Using heat insulation material to seal the junction between duct and the unit.

7. Explode view

ALCA-C(H)12/4R1, ALCA-C(H)18/4R1

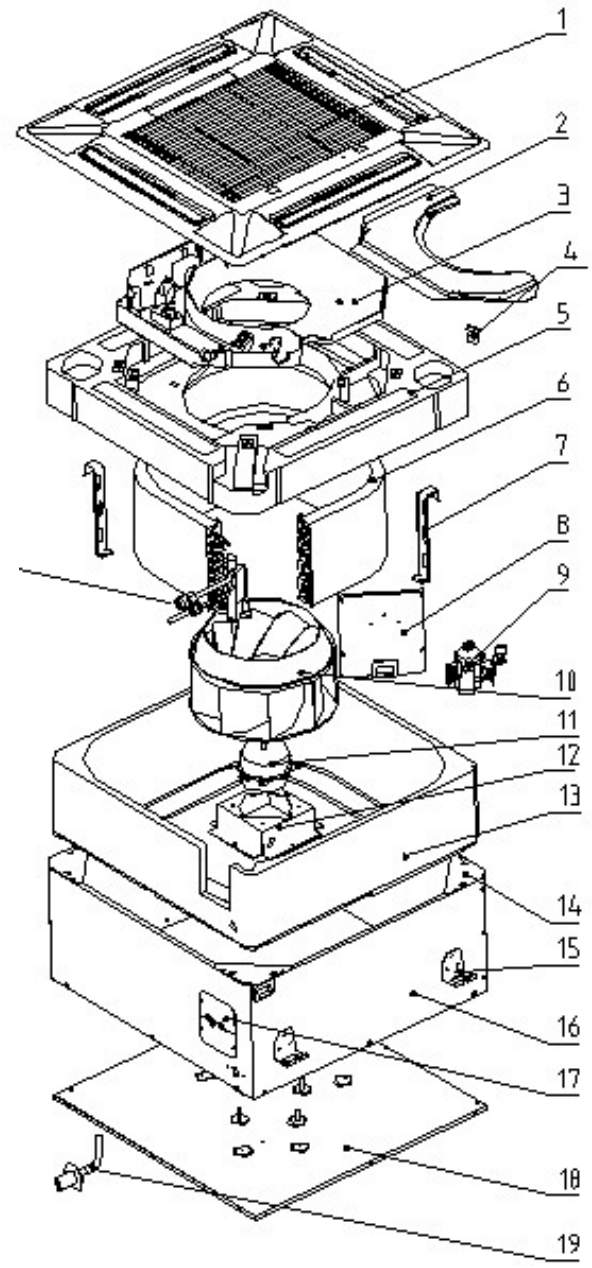

N0.	Chinese name	Part Name	Quantity	Remark
1	面板 MB13(英文)	Panel MB13	1	
1.1	回风格栅组件	Return-air grille assembly	1	
1.2	空气过滤网	Air filter net	1	
1.3	导风叶片	guide wind vane	4	
1.4	步进电机	Step motor	4	24BYJ48-2
1.5	显示灯板	Display board	1	SX-DISP-01
1.6	面板围框组件	Panel frame assembly	1	
2	电控盒盖	Cover for electric components	1	
3	电控盒总成	Electric assembly	1	
3.1	电容	capacitance	1	2.5μF/450V a.c

3.2	控制板	PCB board	1	QRDL-3F(2S)-SYE1
3.3	变压器	Transformer	1	TDB-8-B(PTC)
3.4	端子板 7 位	Terminal board	1	600V 2.5mm2
3.5	传感器 5K3470 XH2 0.5m(塑封)	Sensor 1	1	
3.6	传感器 5K3470 XH2 0.9m(铜壳)	Sensor 2	1	
4	橡胶塞	Rubber plug	1	
5	接水盘组件	Water pan	1	
6	蒸发器总成	Evaporator assembly	1	
6.1	蒸发器组件	Evaporator part	1	
6.2	蒸发器出气管组件	Evaporator outlet tube assembly	1	
6.3	蒸发器进液管组件	Evaporator inlet tube assembly	1	
7	蒸发器挂钩	Evaporator Pothook	2	
8	蒸发器连接板	Evaporator connect board	1	
9	排水泵	Drain pump	1	PLD-700
9.1	浮子开关	Bodder switch	1	
9.2	排水泵支架	Drain pump support	1	
10	风轮	Wind wheel	1	Φ283×166
11	电机	Fan motor	1	YSK30-6E1
12	电机支架	motor holder	1	
13	风道	Air passage	1	
14	接水盘固定板	Water pan holder	4	
15	挂钩	Pothook	4	
16	围板 A	Boarding A	1	
16.1	围板 B	Boarding B	1	
17	阀板 A	Valve board A	1	
17.1	阀板 B	Valve board B	1	
18	底盘组件	Chassis	1	
19	塑料排水接管	Plastic drainage pipe	1	
19.1	塑料排水软管	Plastic drain hose	1	

ALCA-C(H)24/4R1, ALCA-C(H)36/5R1, ALCA-C(H)48/5R1, ALCA-C(H)60/5R1

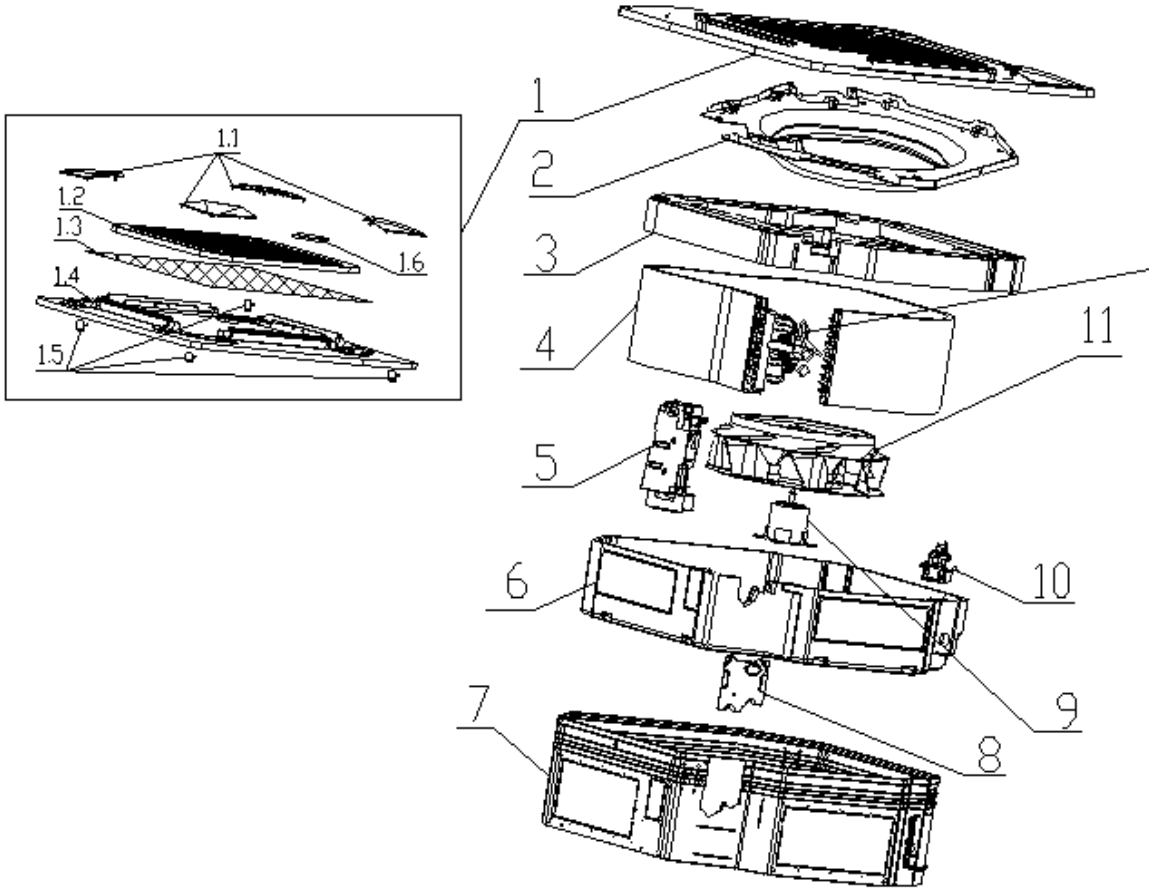

ALCA-C(H)24/4R1 spare part list

N0.	Chinese name	Part Name	Quantity	Remark
1	面板 MB12(英文)	Panel MB12	1	
1.1	面板边角盖板	Panel cover board	2	
1.2	回风格栅组件	Return-air grille assembly	2	
1.3	空气过滤网	Air filter	1	
1.4	面板围框组件	Panel frame assembly	1	
1.4.1	面板围框	Panel frame	1	
1.4.2	导风叶片	Wind-guiding blade	4	
1.5	步进电机	Step motor	1	24BYJ48-2
1.6	显示灯板	Display board	1	SX-DISP-01
2	导风圈总成	Guide wind loop assembly	1	
2.1	导风圈	Guide wind loop	1	
2.2	导风圈配板	Guide wind board	1	
2.3	端子板 7 位	TerminAL board	1	
3	接水盘组件	Defrosting pan	1	
4	蒸发器总成	Evaporator assembly	1	
4.1	蒸发器组件	Evaporator part	1	
4.2	蒸发器出气管组件	Evaporator outlet tube assembly	1	
4.3	蒸发器进液管组件	Evaporator inlet tube assembly	1	
5	电控盒总成	Electric box assembly	1	
5.1	控制板	PCB board	1	QRDL-3F(2S)-SYE1
5.2	变压器	Transformer	1	TDB-8-B(PTC)

5.3	电容	capacitance	1	3μF/450V a.c
5.4	传感器 5K3470 XH2 0.5m(塑封)	Sensor 1	1	
5.5	传感器 5K3470 XH2 1.5m(铜壳)	Sensor 2	1	
6	底盘泡沫组件	Chassis foam assembly	1	
7	底盘组件	Chassis assembly	1	
8	配管盖板	Piping cover board	1	
9	电机	Fan motor	1	YDK30-6 Q
10	排水泵总成	Drain pump assembly	1	
10.1	排水泵支架	Drain pump support	1	
10.2	水泵减振橡胶	Pump damping rubber	3	
10.3	排水泵	Drain pump	1	PLD-1200
10.4	排水软管(水泵用)	Drain flexible pipe (Drain pump)	1	
10.5	排水接管	Drain pipe	1	
10.6	浮子开关 GMF-31	Float switch	1	
11	风轮	Wind wheel	1	Φ462×147(3P)

ALC(H)36/5R1 spare part list

N0.	Chinese name	Part Name	Quantity	Remark
1	面板 MB12(英文)	Panel MB12	1	
1.1	面板边角盖板	Panel cover board	2	
1.2	回风格栅组件	Return-air grille assembly	2	
1.3	空气过滤网	Air filter	1	
1.4	面板围框组件	Panel frame assembly	1	
1.4.1	面板围框	Panel frame	1	
1.4.2	导风叶片	Wind-guiding blade	4	
1.5	步进电机	Step motor	1	24BYJ48-2
1.6	显示灯板	Display board	1	SX-DISP-01
2	导风圈总成	Guide wind loop assembly	1	
2.1	导风圈	Guide wind loop	1	
2.2	导风圈配板	Guide wind board	1	
2.3	端子板 7 位	TerminAL board	1	
3	接水盘组件	Defrosting pan	1	
4	蒸发器总成	Evaporator assembly	1	
4.1	蒸发器组件	Evaporator part	1	
4.2	蒸发器出气管组件	Evaporator outlet tube assembly	1	
4.3	蒸发器进液管组件	Evaporator inlet tube assembly	1	
5	电控盒总成	Electric box assembly	1	
5.1	控制板	PCB board	1	QRD-SN3F(2S)-SYE1
5.2	变压器	Transformer	1	TDB-8-B(PTC)
5.3	电容	capacitance	1	4μF/450V a.c
5.4	传感器 5K3470 XH2 0.5m(塑封)	Sensor 1	1	
5.5	传感器 5K3470 XH2 1.5m(铜壳)	Sensor 2	1	
6	底盘泡沫组件	Chassis foam assembly	1	
7	底盘组件	Chassis assembly	1	
8	配管盖板	Piping cover board	1	
9	电机	Fan motor	1	YDK45-6 Q
10	排水泵总成	Drain pump assembly	1	
10.1	排水泵支架	Drain pump support	1	
10.2	水泵减振橡胶	Pump damping rubber	3	
10.3	排水泵	Drain pump	1	PLD-1200

10.4	排水软管(水泵用)	Drain flexible pipe (Drain pump)	1	
10.5	排水接管	Drain pipe	1	
10.6	浮子开关 GMF-31	Float switch	1	
11	风轮	Wind wheel	1	Φ462×147(3P)

ALCA-C(H)48/5R1, ALCA-C(H)60/5R1 spare part list

N0.	Chinese name	Part Name	Quantity	Remark
1	面板 MB12(英文)	Panel MB12	1	
1.1	面板边角盖板	Panel cover board	2	
1.2	回风格栅组件	Return-air grille assembly	2	
1.3	空气过滤网	Air filter	1	
1.4	面板围框组件	Panel frame assembly	1	
1.4.1	面板围框	Panel frame	1	
1.4.2	导风叶片	Wind-guiding blade	4	
1.5	步进电机	Step motor	1	24BYJ48-2
1.6	显示灯板	Display board	1	SX-DISP-01
2	导风圈总成	Guide wind loop assembly	1	
2.1	导风圈	Guide wind loop	1	
2.2	导风圈配板	Guide wind board	1	
2.3	端子板 7 位	TerminAL board	1	
3	接水盘组件	Defrosting pan	1	
4	蒸发器总成	Evaporator assembly	1	
4.1	蒸发器组件	Evaporator part	1	
4.2	蒸发器出气管组件	Evaporator outlet tube assembly	1	
4.3	蒸发器进液管组件	Evaporator inlet tube assembly	1	
5	电控盒总成	Electric box assembly	1	
5.1	控制板	PCB board	1	QRD-SN3F(2S)-SYE1
5.2	变压器	Transformer	1	TDB-8-B(PTC)
5.3	电容	capacitance	1	6μF/450V a.c
5.4	传感器 5K3470 XH2 0.5m(塑封)	Sensor 1	1	
5.5	传感器 5K3470 XH2 1.5m(铜壳)	Sensor 2	1	
6	底盘泡沫组件	Chassis foam assembly	1	
7	底盘组件	Chassis assembly	1	
8	配管盖板	Piping cover board	1	
9	电机	Fan motor	1	YDK80-6-50 Q
10	排水泵总成	Drain pump assembly	1	
10.1	排水泵支架	Drain pump support	1	
10.2	水泵减振橡胶	Pump damping rubber	3	
10.3	排水泵	Drain pump	1	PLD-1200
10.4	排水软管(水泵用)	Drain flexible pipe (Drain pump)	1	
10.5	排水接管	Drain pipe	1	
10.6	浮子开关 GMF-31	Float switch	1	
11	风轮	Wind wheel	1	Φ470×170

Ceiling & floor type

1.Feature.....37

2.Specfication 39

3.Capacity amendment.....45

4.Demension 47

5.Electrical wiring 48

6.Installation.....56

7.Explode view.....58

1.Feature

Ceiling& Foor type A/C (Cooling-only or Heat pump) can be installed under the ceiling and also on the floor. Compared with normal Floor &Standing type A/C, it can be hoisted under the ceiling,saving room space, it is also the updating Product for Floor & Standing type A/C.

Application occasions:

Small super market, restaurant, office, meeting room, villa living room, family bedroom, and it can even be used as the updating Product for modern residential A/C.

Features:

◇ Suspended ceiling, installation under ceiling, saving room space, it is very suitable for family or office place;
◇ Convenient and flexible for indoor unit installation, can be installed under the ceiling or on the floor;
◇ With Setting or Auto two operation modes, multi fan speed, makes you feel more comfortable;
◇ Shell was formed by mold, and the appearance is “slim”, “elegant”, “fashion” and “comfortable”;
◇ Special insulation design, achieves high heat insulation efficiency and no condensation on shell;
◇ Long term air filter, the wash period is two times longer than normal filter, maintenance is free;
◇ Adopting low noise centrifugal fan, strong wind but quiet operation, the silence design achieves harmony residential living;
◇ All the installation and maintenance can be done in the bottom of unit, saving the maintenance space;
◇ 3-phase power supply type units with low ambient temperature cooling function, which makes the unit can run normally on the condition that the ambient temperature falls down to -15℃;;
◇ Standard remote controller and optional wired controller;
◇ Auxiliary electric heater for heat pump unit, with fast heating and low ambient temperature heating functions;
◇ Failure automatic detection, if there is a failure, the indicator will flash and the failure code will display on the wired controller, the failure cause is easier to be found..
◇ Filter to dismantle to wash convenience, don't need to make use of any tool, can move to dismantle to filter a net to clean.
◇ Ultra slim design, the thickness only 205 mm, and have vertical and horizontal swing function.

Function introduction

Type	Item	ALCF-C(H)**R1					
		12/4	18/4	24/4	36/5	48/5	60/5
Protection	High pressure protection	—	—	—	●	●	●
	Low pressure protection	—	—	—	●	●	●
	Compressor overloading protection	●	●	●	●	●	●
	High Ext. temperate protection	—	—	—	●	●	●
	Phase protection(Phase-loss, phase- reverse)	—	—	—	●	●	●
	Over-heating protection	●	●	●	●	●	●
	Anti-freezing protection	●	●	●	●	●	●
	Sensor failure alarm	●	●	●	●	●	●
	Failure code display	●	●	●	●	●	●
Comfort	Cooling	●	●	●	●	●	●
	Heating	●	●	●	●	●	●
	3-Speed	●	●	●	●	●	●
	Adjustable ESP	—	—	—	—	—	—
	Auto-restart(Optional)	●	●	●	●	●	●
	Anti-cold wind	●	●	●	●	●	●
	Afterheat wind blowing	●	●	●	●	●	●
	Timing ON/OFF	●	●	●	●	●	●
Operation	Time display	●	●	●	●	●	●
	Operation mode display	●	●	●	●	●	●
	Fan speed display	●	●	●	●	●	●
	Defrost display	●	●	●	●	●	●
	Timing ON/OFF display	●	●	●	●	●	●
	Wind angle display	●	●	●	●	●	●
	Sleeping mode display	●	●	●	●	●	●
Running	Auto start	●	●	●	●	●	●
	Dehumidifying	●	●	●	●	●	●
	Auto defrost	●	●	●	●	●	●
	Ventilation function	●	●	●	●	●	●
	Low ambient temperature cooling	●	●	●	●	●	●
Health	Washable air filter	●	●	●	●	●	●
	Fresh air interface	—	—	—	—	—	—
Installation	Left/right drainage	—	—	—	—	—	—
	Left/right pipe connection	—	—	—	—	—	—
	Down/back air suction	—	—	—	—	—	—
	Installation indicating board	—	—	—	—	—	—

Remarks:● Stands for “YES” — Stands for “NO”

2.Specfication

Model	Indoor		ALCF-C12/4R1	ALCF-H12/4R1	ALCF-C18/4R1
	Outdoor		AL-C12/4R1(U)	AL-H12/4R1(U)	AL-C18/4R1(U)
Factory Model	Indoor		ALCe-12A4/R1-C5	ALCe-H12A4/R1-C5	ALCe-18A4/R1-C5
	Outdoor		AL-12A4/R1(T)	AL-H12A4/R1(T)	AL-18A4/R1(T)
Power Supply		V~,Hz,Ph	220~240,50,1	220~240,50,1	220~240,50,1
Capacity	Cooling	Btu/h	12000	12000	18000
		kW	3.6	3.6	5.3
	Heating	Btu/h	/	13500	/
		kW	/	3.9	/
Electric Data	Rated Cooling Power Input	kW	1.13	1.13	1.72
	Rated Heating Power Input	kW	/	1.15	/
	Rated Cooling Current	A	5.17	5.17	7.87
	Rated Heating Current	A	/	5.26	/
Performance	EER	W/W	3.19	3.19	3.08
	COP	W/W	/	3.39	/
Indoor Fan Fotor	Model		YSK-40W-4	YSK-40W-4	YSK-40W-4
	Brand		HUATE	HUATE	HUATE
	Output Power x Fan quantity	W	40*1	40*1	40*1
	Capacitor	uF	2.5	2.5	2.5
	Speed (Hi/Mi/Lo)	r/min	1300/1010/900	1300/1010/900	1300/1010/900
Indoor Coil	Number Of Row		2	2	3
	Tube Pitch(a)x Row Pitch(b)	mm	20.5×12.7	20.5×12.7	20.5×12.7
	Fin Spacing	mm	1.6	1.6	1.6
	Fin Material		Hydrophilic aluminum fin		
	Tube Outside Dia.and Material	mm	φ7,Inner grooved	φ7,Inner grooved	φ7,Inner grooved
	Coil Length x Height x Width	mm	570×246×25.4	570×246×25.4	570×246×38.1
	Heat Exchanging Area	m^2	4.00	4.00	6.00
Indoor Unit	Indoor Air Flow (Hi/Mi/Lo)	m^3/h	620/496/434	620/496/434	850/680/595
	Noise Level(Hi/Mi/Lo)	dB(A)	39/36/30	39/36/30	43/40/34
	Net Dimension (W*H*D)	mm	929×660×205	929×660×205	929×660×205
	Packing Dimension (W*H*D)	mm	1010×720×280	1010×720×280	1010×720×280
	Net Weight	Kg	24	24	25
	Gross Weight	Kg	27	27	28
Refrigerant Pipe	Liquid Side	mm	6.35	6.35	6.35
	Gas Side	mm	12.7	12.7	12.7
	Max. Refrigerant Pipe Length	m	15	15	20

	Max. Difference In Level	m	10	10	15
Operation Temperature Range		℃	16~32	16~32	16~32
Ambient Temperature Range(Cooling/Heating)		℃	-5~49	-5~49/-15~24	-5~49
Application Area		m^2	13-21	13-21	21-35
Connection Wiring	Power Wiring(Indoor)	mm^2	3×1.5mm^2	3×1.5mm^2	3×2.5mm^2
	Power Wiring(Outdoor)	mm^2	/	/	/
	Signal Wiring	mm^2	3×1.5mm^2+1mm^2	3×1.5mm^2+2×1mm^2	3×2.5mm^2+1mm^2
Wireless Remote Controller			YKR-H/009E	YKR-H/009E	YKR-H/009E
Qty'per 20'& 40'&40HQ(Only For Reference)		Set	60/129/162	60/129/162	54/114/142

Note:

1. Working condition of the cooling capacity measured: Inside the room DB temperature 27℃,WB temperature19℃;Outside of the room DB temperature 35℃,WB temperature 24℃;Working condition of the heating capacity measured:Inside the room DB temperature 20℃,Outside of the room DB temperature 7℃,WB temperature 6℃。
2. Parameters above are all measured when the connecting pipe is 5 meters.
3. Parameters above may be modified as product improvement. We keep the right to change the product specifications without prior notice, please take the parameters listed on the nameplate as criterion.

Model	Indoor		ALCF-H18/4R1	ALCF-C24/4R1	ALCF-H24/4R1
	Outdoor		AL-H18/4R1(U)	AL-C24/4R1(U)	AL-H24/4R1(U)
Factory Model	Indoor		ALCe-H18A4/R1-C5	ALCe-24B4/R1-C5	ALCe-H24B4/R1-C5
	Outdoor		AL-H18A4/R1(T)	AL-24B4/R1(T)	AL-H24B4/R1(T)
Power Supply		V~,Hz,Ph	220~240,50,1	220~240,50,1	220~240,50,1
Capacity	Cooling	Btu/h	18000	24000	24000
		kW	5.3	7.2	7.2
	Heating	Btu/h	20000	/	27500
		kW	5.8	/	8.1
Electric Data	Rated Cooling Power Input	kW	1.72	2.18	2.18
	Rated Heating Power Input	kW	1.70	/	2.51
	Rated Cooling Current	A	7.87	9.98	9.98
	Rated Heating Current	A	7.78	/	11.49
Performance	EER	W/W	3.08	3.31	3.31
	COP	W/W	3.41	/	3.23
Indoor Fan Fotor	Model		YSK-40W-4	YSK-70W-4	YSK-70W-4
	Brand		HUATE	HUATE	HUATE
	Output Power x Fan quantity	W	40*1	70*1	70*1
	Capacitor	uF	2.5	4	4
	Speed (Hi/Mi/Lo)	r/min	1300/1010/900	1380/1100/970	1380/1100/970
Indoor Coil	Number Of Row		3	3	3
	Tube Pitch(a)x Row Pitch(b)	mm	20.5×12.7	20.5×12.7	20.5×12.7

	Fin Spacing	mm	1.6	1.6	1.6
	Fin Material		Hydrophilic aluminum fin		
	Tube Outside Dia.and Material	mm	φ7,Inner grooved	φ7,Inner grooved	φ7,Inner grooved
	Coil Length x Height x Width	mm	570×246×38.1	950×246×38.1	950×246×38.1
	Heat Exchanging Area	m^2	6.00	10.00	10.00
Indoor Unit	Indoor Air Flow (Hi/Mi/Lo)	m^3/h	850/680/595	1200/960/840	1200/960/840
	Noise Level(Hi/Mi/Lo)	dB(A)	43/40/34	46/43/38	46/43/38
	Net Dimension (W*H*D)	mm	929×660×205	1280×660×205	1280×660×205
	Packing Dimension (W*H*D)	mm	1010×720×280	1360×720×280	1360×720×280
	Net Weight	Kg	25	26	26
	Gross Weight	Kg	28	29	29
Refrigerant Pipe	Liquid Side	mm	6.35	9.52	9.52
	Gas Side	mm	12.7	15.88	15.88
	Max. Refrigerant Pipe Length	m	20	30	30
	Max. Difference In Level	m	15	15	15
Operation Temperature Range		℃	16~32	16~32	16~32
Ambient Temperature Range(Cooling/Heating)		℃	-5~49/-15~24	-5~49	-5~49/-15~24
Application Area		m^2	21-35	28-47	28-47
Connection Wiring	Power Wiring(Indoor)	mm^2	3×2.5mm^2	/	/
	Power Wiring(Outdoor)	mm^2	/	3×4mm^2	3×4mm^2
	Signal Wiring	mm^2	3×2.5mm^2+2×1mm^2	3×1mm^2+2×1mm^2	3×1mm^2+3×1mm^2
Wireless Remote Controller			YKR-H/009E	YKR-H/009E	YKR-H/009E
Qty'per 20'& 40'&40HQ(Only For Reference)		Set	54/114/142	40/80/114	40/80/114

Note:

1. Working condition of the cooling capacity measured: Inside the room DB temperature 27℃,WB temperature19℃;Outside of the room DB temperature 35℃,WB temperature 24℃;Working condition of the heating capacity measured:Inside the room DB temperature 20℃,Outside of the room DB temperature 7℃,WB temperature 6℃。
2. Parameters above are all measured when the connecting pipe is 5 meters.
3. Parameters above may be modified as product improvement. We keep the right to change the product specifications without prior notice, please take the parameters listed on the nameplate as criterion.

Model	Indoor		ALCF-C36/5R1	ALCF-H36/5R1	ALCF-C48/5R1
	Outdoor		AL-C36/5R1(U)	AL-H36/5R1(U)	AL-C48/5R1(U)
Factory Model	Indoor		ALCe-36A5/R1-C5	ALCe-H36A5/R1-C5	ALCe-C48A5/R1-C5
	Outdoor		AL-36A5/R1(T)	AL-H36A5/R1(T)	AL-48A5/R1(T)
Power Supply		V~,Hz,P	380~415,50,3	380~415,50,3	380~415,50,3

		h			
Capacity	Cooling	Btu/h	36000	36000	48000
		kW	10.6	10.6	14.0
	Heating	Btu/h	/	40000	/
		kW	/	11.7	/
Electric Data	Rated Cooling Power Input	kW	3.77	3.77	4.87
	Rated Heating Power Input	kW	/	3.50	/
	Rated Cooling Current	A	7.22	7.22	9.32
	Rated Heating Current	A	/	6.69	/
Performance	EER	W/W	2.81	2.81	2.87
	COP	W/W	/	3.34	/
Indoor Fan Fotor	Model		YSK-70W-4	YSK-70W-4	YSK-105W-4
	Brand		HUATE	HUATE	HUATE
	Output Power x Fan quantity	W	70	70	105
	Capacitor	uF	4	4	5
	Speed (Hi/Mi/Lo)	r/min	1380/1100/970	1380/1100/970	1380/1100/970
Indoor Coil	Number Of Row		3	3	3
	Tube Pitch(a)x Row Pitch(b)	mm	22×19.05	22×19.05	25.4×22
	Fin Spacing	mm	1.6	1.6	1.6
	Fin Material		Hydrophilic aluminum fin		
	Tube Outside Dia.and Material	mm	φ7.94,Inner grooved	φ7.94,Inner grooved	φ9.52,Inner grooved
	Coil Length x Height x Width	mm	950×264×57.15	950×264×57.15	1333×220×38.1
	Heat Exchanging Area	m^2	14.56	14.56	16.36
Indoor Unit	Indoor Air Flow (Hi/Mi/Lo)	m^3/h	1500/1200/1050	1500/1200/1050	1800/1440/1260
	Noise Level(Hi/Mi/Lo)	dB(A)	50/47/41	50/47/41	51/48/42
	Net Dimension (W*H*D)	mm	1280×660×205	1280×660×205	1631×660×205
	Packing Dimension (W*H*D)	mm	1360×720×280	1360×720×280	1710×720×280
	Net Weight	Kg	33	33	44
	Gross Weight	Kg	38	38	50
Refrigerant Pipe	Liquid Side	mm	9.52	9.52	9.52
	Gas Side	mm	15.88	15.88	19.05
	Max. Refrigerant Pipe Length	m	50	50	50
	Max. Difference In Level	m	30	30	30
Operation Temperature Range		℃	16~32	16~32	16~32
Ambient Temperature Range(Cooling/Heating)		℃	-5~49	-5~49/-15~24	-5~49
Application Area		m^2	42-70	42-70	56-93
Connection Wiring	Power Wiring(Indoor)	mm^2	3×1mm^2	3×1mm^2	3×1mm^2
	Power Wiring(Outdoor)	mm^2	5×2.5mm^2	5×2.5mm^2	5×2.5mm^2
	Signal Wiring	mm^2	2×1mm^2	2×1mm^2	2×1mm^2

Wireless Remote Controller		YKR-H/009E	YKR-H/009E	YKR-H/009E
Qty'per 20'& 40'&40HQ(Only For Reference)	Set	32/67/92	32/67/92	20/41/43

Note:

1. Working condition of the cooling capacity measured: Inside the room DB temperature 27℃,WB temperature19℃;Outside of the room DB temperature 35℃,WB temperature 24℃;Working condition of the heating capacity measured:Inside the room DB temperature 20℃,Outside of the room DB temperature 7℃,WB temperature 6℃。
2. Parameters above are all measured when the connecting pipe is 5 meters.
3. Parameters above may be modified as product improvement. We keep the right to change the product specifications without prior notice, please take the parameters listed on the nameplate as criterion.

Model	Indoor		ALCF-H48/5R1	ALCF-C60/5R1	ALCF-H60/5R1
	Outdoor		AL-H48/5R1(U)	AL-C60/5R1(U)	AL-H60/5R1(U)
Factory Model	Indoor		ALCe-H48A5/R1-C5	ALCe-60A5/R1-C5	ALCe-H60A5/R1-C5
	Outdoor		AL-H48A5/R1(T)	AL-60A5/R1(T)	AL-H60A5/R1(T)
Power Supply		V~,Hz,Ph	380~415,50,3	380~415,50,3	380~415,50,3
Capacity	Cooling	Btu/h	48000	60000	60000
		kW	14.0	17.6	17.6
	Heating	Btu/h	51000	/	63500
		kW	15.0	/	18.5
Electric Data	Rated Cooling Power Input	kW	4.87	5.71	5.71
	Rated Heating Power Input	kW	5.13	/	5.97
	Rated Cooling Current	A	9.32	10.93	10.93
	Rated Heating Current	A	9.82	/	11.48
Performance	EER	W/W	2.87	3.08	3.08
	COP	W/W	2.92	/	3.08
Indoor Fan Fotor	Model		YSK-105W-4	YSK-105W-4	YSK-105W-4
	Brand		HUATE	HUATE	HUATE
	Output Power x Fan quantity	W	105	105	105
	Capacitor	uF	5	4	4
	Speed (Hi/Mi/Lo)	r/min	1380/1100/970	1380/1100/970	1380/1100/970
Indoor Coil	Number Of Row		3	3	3
	Tube Pitch(a)x Row Pitch(b)	mm	25.4×22	25.4×22	25.4×22
	Fin Spacing	mm	1.6	1.6	1.6
	Fin Material		Hydrophilic aluminum fin		
	Tube Outside Dia.and Material	mm	φ9.52,Inner grooved	φ9.52,Inner grooved	φ9.52,Inner grooved
	Coil Length x Height x Width	mm	1333×220×38.1	1333×220×38.1	1333×220×38.1
	Heat Exchanging Area	m^2	16.36	16.36	16.36
Indoor Unit	Indoor Air Flow (Hi/Mi/Lo)	m^3/h	1800/1440/1260	1800/1440/1260	1800/1440/1260
	Noise Level(Hi/Mi/Lo)	dB(A)	51/48/42	51/48/42	51/48/42

	Net Dimension (W*H*D)	mm	1631×660×205	1631×660×205	1631×660×205
	Packing Dimension (W*H*D)	mm	1710×720×280	1710×720×280	1710×720×280
	Net Weight	Kg	44	44	44
	Gross Weight	Kg	50	50	50
Refrigerant Pipe	Liquid Side	mm	9.52	9.52	9.52
	Gas Side	mm	19.05	19.05	19.05
	Max. Refrigerant Pipe Length	m	50	50	50
	Max. Difference In Level	m	30	30	30
Operation Temperature Range		℃	16~32	16~32	16~32
Ambient Temperature Range(Cooling/Heating)		℃	-5~49/-15~24	-5~49	-5~49/-15~24
Application Area		m^2	56-93	64-107	64-107
Connection Wiring	Power Wiring(Indoor)	mm^2	3×1mm^2	3×1mm^2	3×1mm^2
	Power Wiring(Outdoor)	mm^2	5×2.5mm^2	5×2.5mm^2	5×2.5mm^2
	Signal Wiring	mm^2	2×1mm^2	2×1mm^2	2×1mm^2
Wireless Remote Controller			YKR-H/009E	YKR-H/009E	YKR-H/009E
Qty'per 20'& 40'&40HQ(Only For Reference)		Set	20/41/43	20/41/43	20/41/43

Note:

1. Working condition of the cooling capacity measured: Inside the room DB temperature 27℃,WB temperature19℃;Outside of the room DB temperature 35℃,WB temperature 24℃;Working condition of the heating capacity measured:Inside the room DB temperature 20℃,Outside of the room DB temperature 7℃,WB temperature 6℃。
2. Parameters above are all measured when the connecting pipe is 5 meters.
3. Parameters above may be modified as product improvement. We keep the right to change the product specifications without prior notice, please take the parameters listed on the nameplate as criterion.

3 Capacity amendment

3.1 Running range

Cooling capacity (Btu/h)		12000	18000	24000	36000	48000	60000
Power supply		220-240V~/50Hz			380-415V 3N~/50Hz		
Voltage		187~242V			320~420V		
ambient temperature	Cooling	-5~49℃					
	Heating	-15~24℃					

3.2 Amendment coefficient of cooling capacity under different indoor/outdoor DB/WB temperature

Indoor air inlet temperature℃		**Outdoor air inlet DB temperature℃**				
DB	**WB**	**25**	**30**	**35**	**40**	**43**
23	16	0.98	0.94	0.89	0.85	0.82
25	18	1.05	1	0.95	0.90	0.87
27	19	1.1	1.05	1	0.95	0.91
28	20	1.12	1.07	1.02	0.96	0.93
30	22	1.19	1.13	1.08	1.02	0.99
32	24	1.26	1.20	1.15	1.08	1.05

Actual cooling capacity calculation:

Actual cooling capacity=amendment coefficient of cooling capacity × nominal cooling capacity

——nominal cooling capacity could be found from the performance parameters list

——amendment coefficient of cooling capacity could be found from table above.

3.3 Amendment coefficient of heating capacity under different indoor/outdoor DB / WB temperature

Indoor air inlet DB temperature ℃	Outdoor air inlet WB temperature ℃				
	-5	0	6	10	15
16	0.65	0.80	1.02	1.13	-
18	0.61	0.76	1.02	1.12	-
20	0.6	0.75	1	1.11	1.25
21	0.59	0.72	0.99	1.1	1.24
22	0.58	0.71	0.97	1.09	1.23
24	0.56	0.7	0.96	1.08	1.22

Actual heating capacity calculation:

Actual heating capacity=amendment coefficient of heating capacity × nominal heating capacity

——nominal heating capacity could be found from the performance parameters list

——amendment coefficient of heating capacity could be found from table above.

3.4 Amendment coefficients of heating and cooling capacity under different height drop

Different Cooling Capacity modified coefficients at different height:

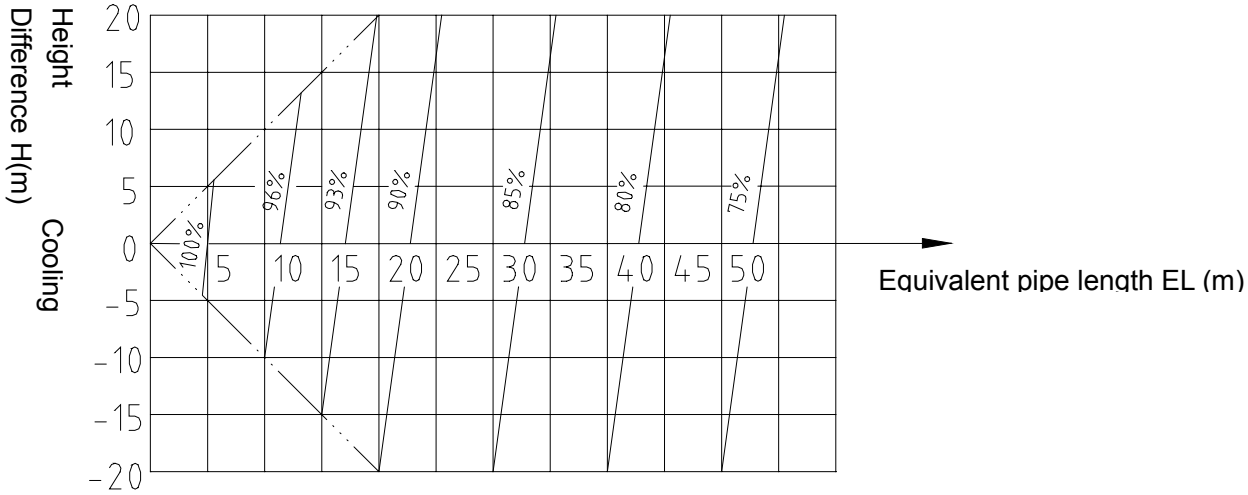

Note:

H = Height of Outdoor Unit — Height of Indoor Unit

3.5 Different Heating Capacity modified coefficients at different height:

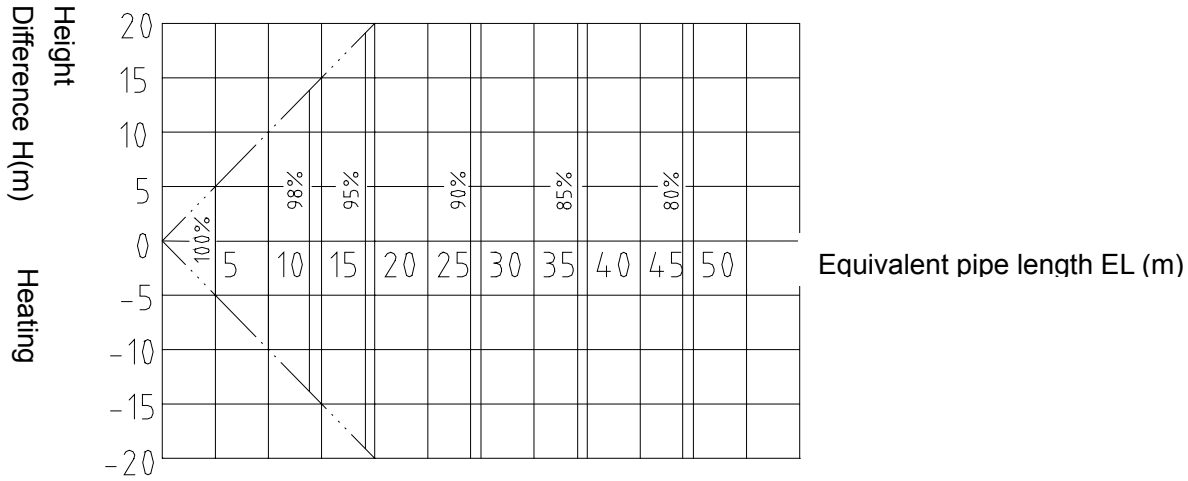

Note:

H = Height of Outdoor Unit — Height of Indoor Unit

4. Demension

ALCF-C(H)12/4R1 ALCF-C(H)18/4R1,

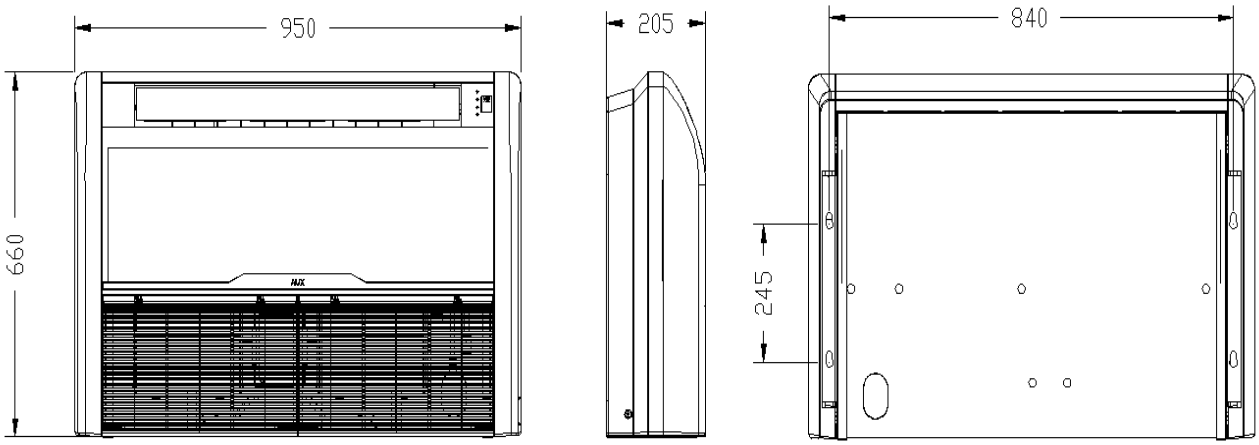

ALCF-C(H)24/4R1, ALCF-C(H)36/5R1

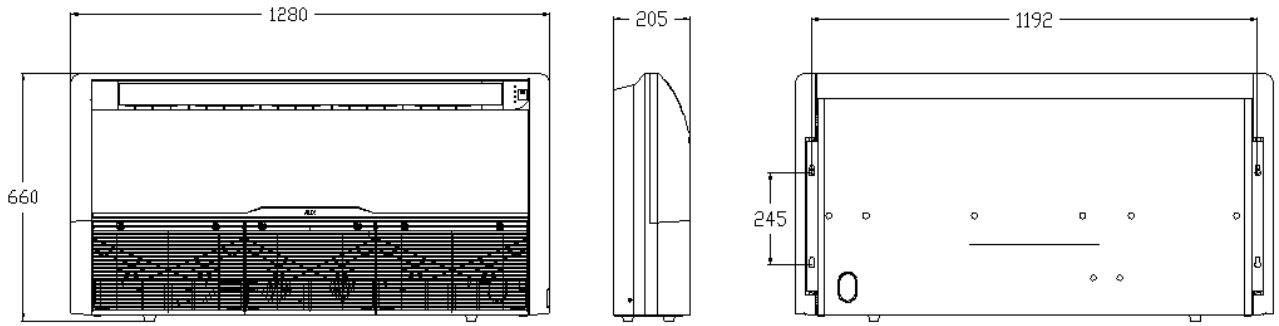

ALCF-C(H)48/5R1, ALCF-C(H)60/5R1

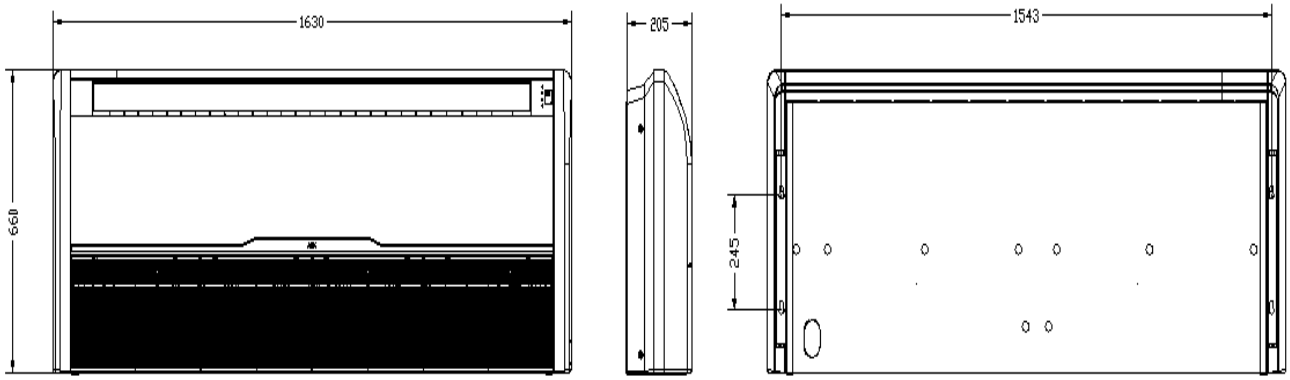

5. Electrical wiring diagram between indoor and outdoor unit

ALCF-C(H)12/4R1, ALCF-C(H)18/4R1

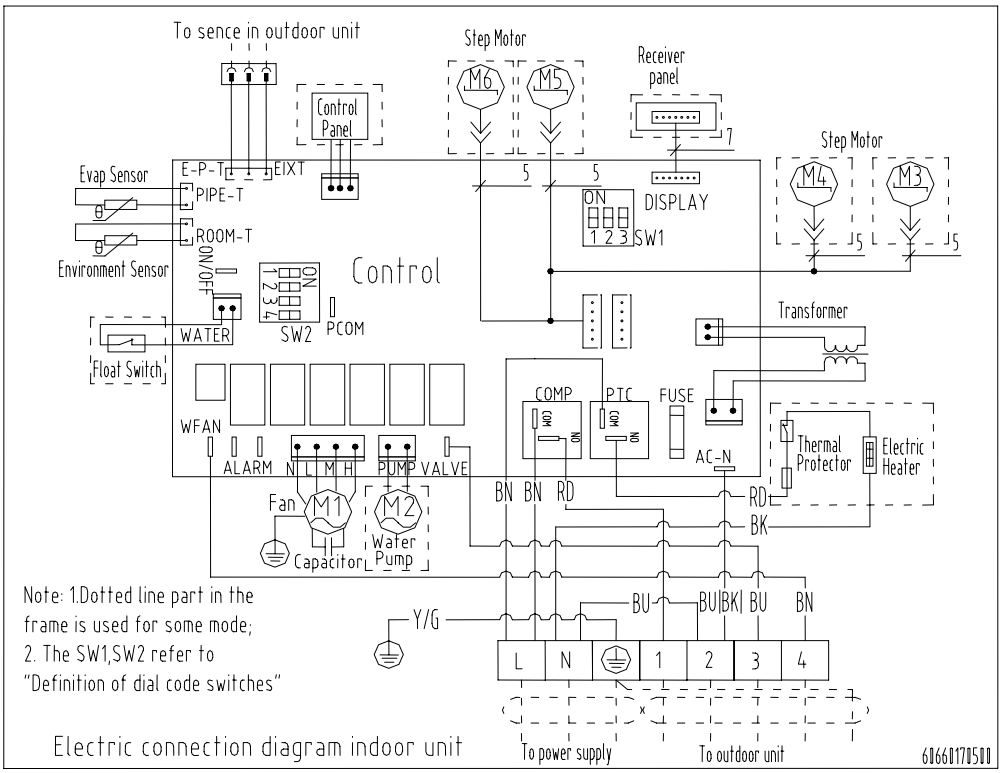

ALCF-C12/4R1, ALCF-C18/4R1

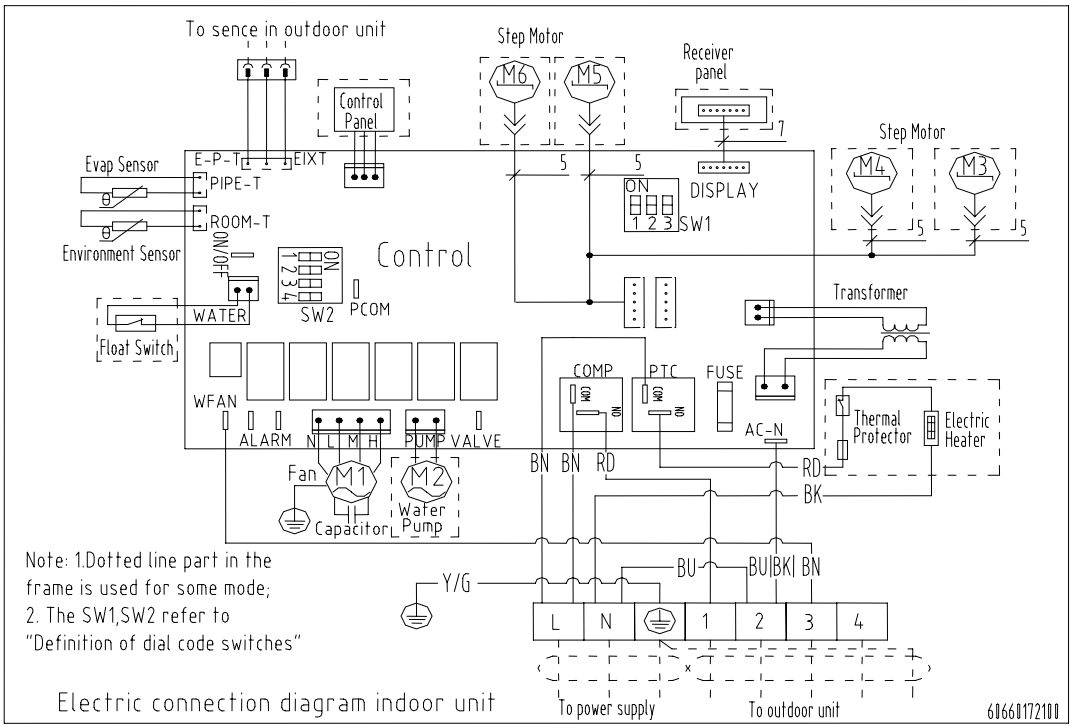

ALCF-H24/4R1

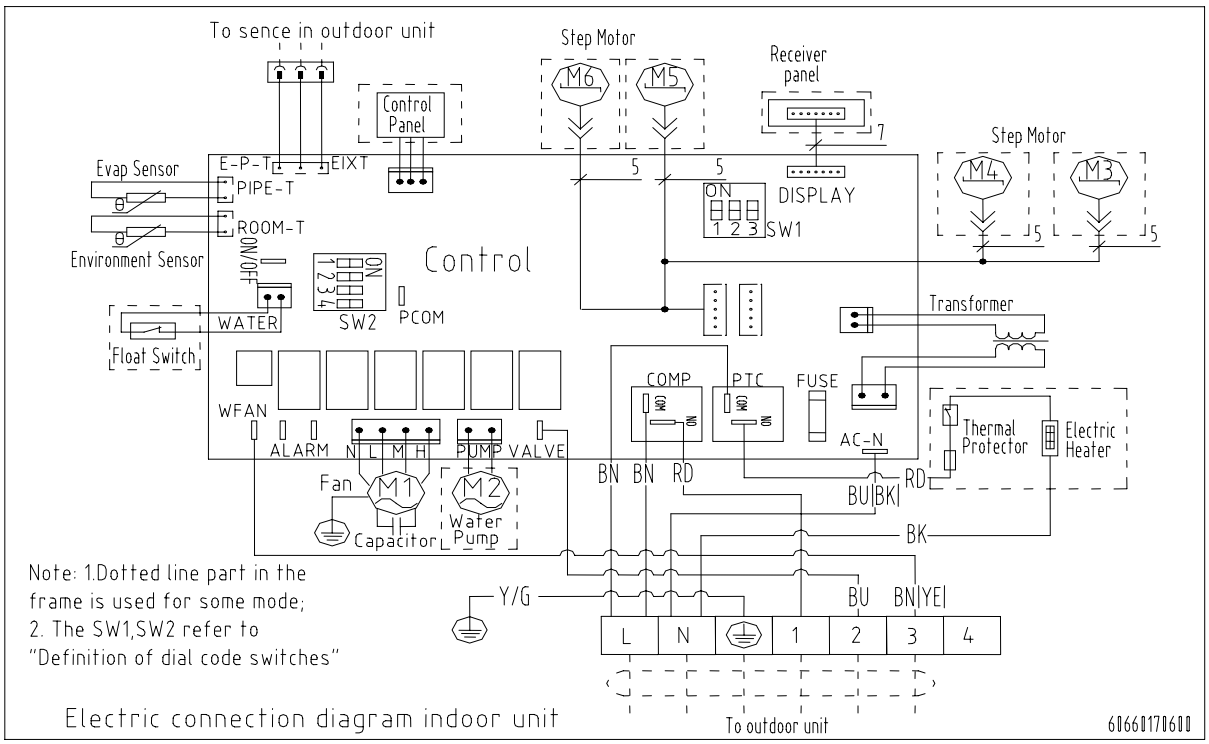

ALCF-C24/4R1

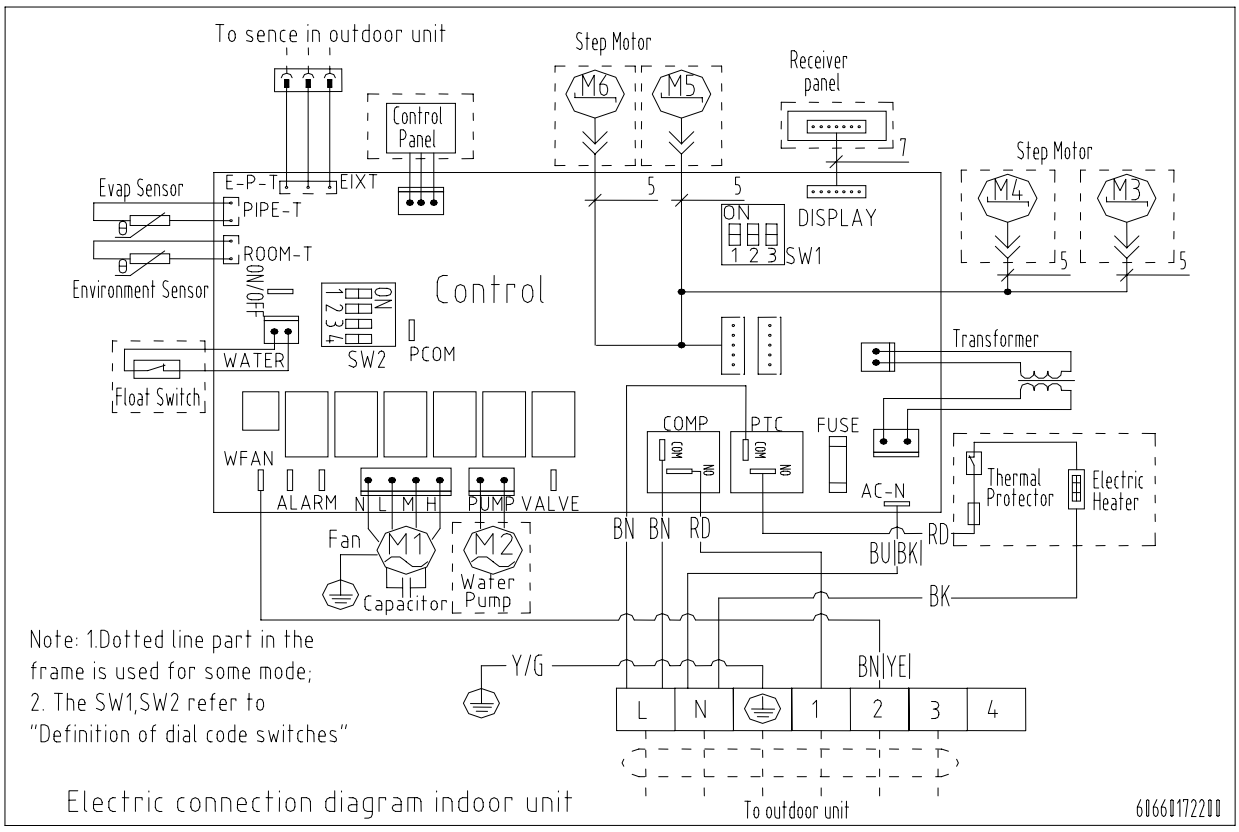

ALCF-C(H)36/5R1, ALCF-C(H)48/5R1, ALCF-C(H)60/5R1

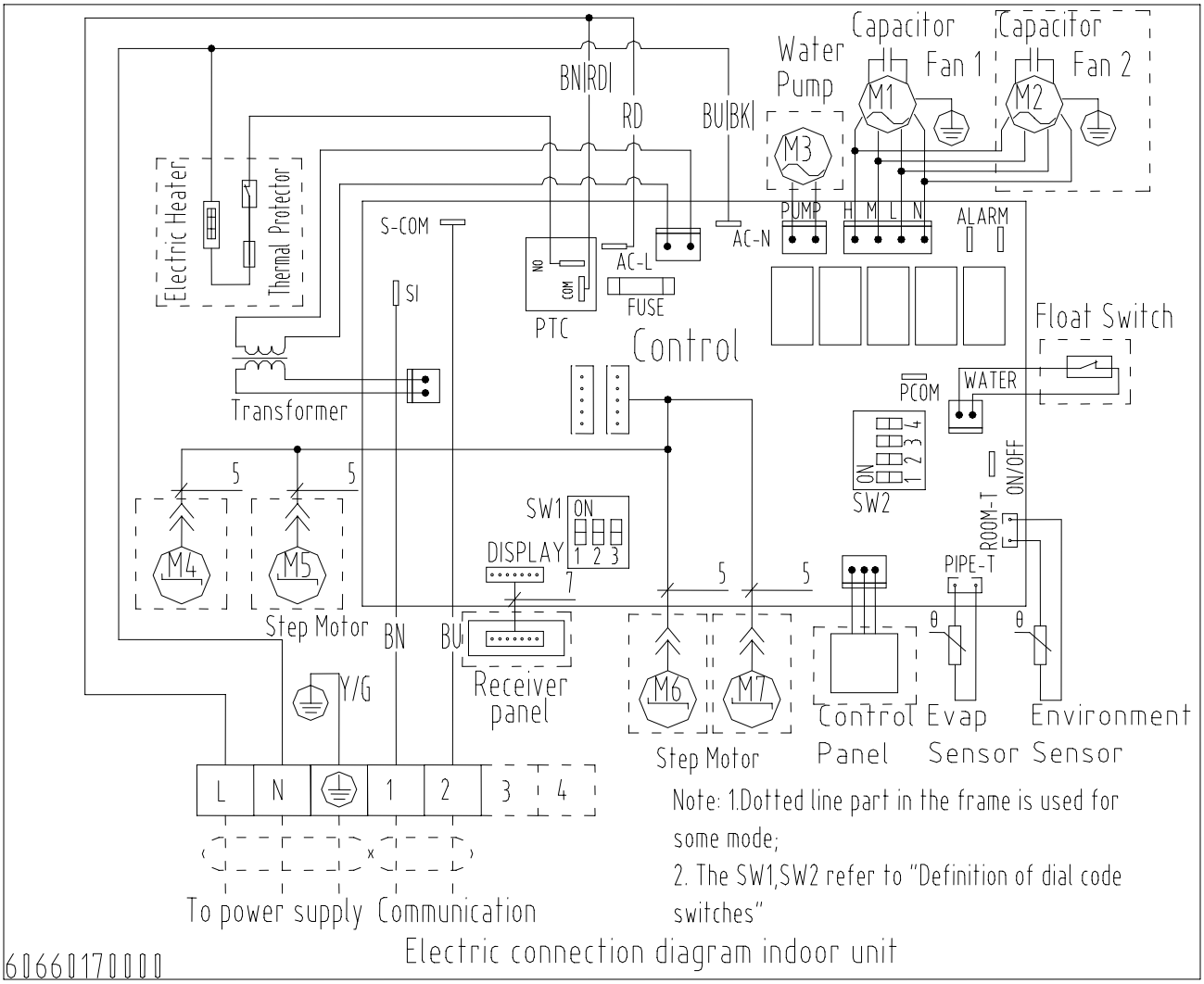

Electrical connection

ALCF-H12/4R1

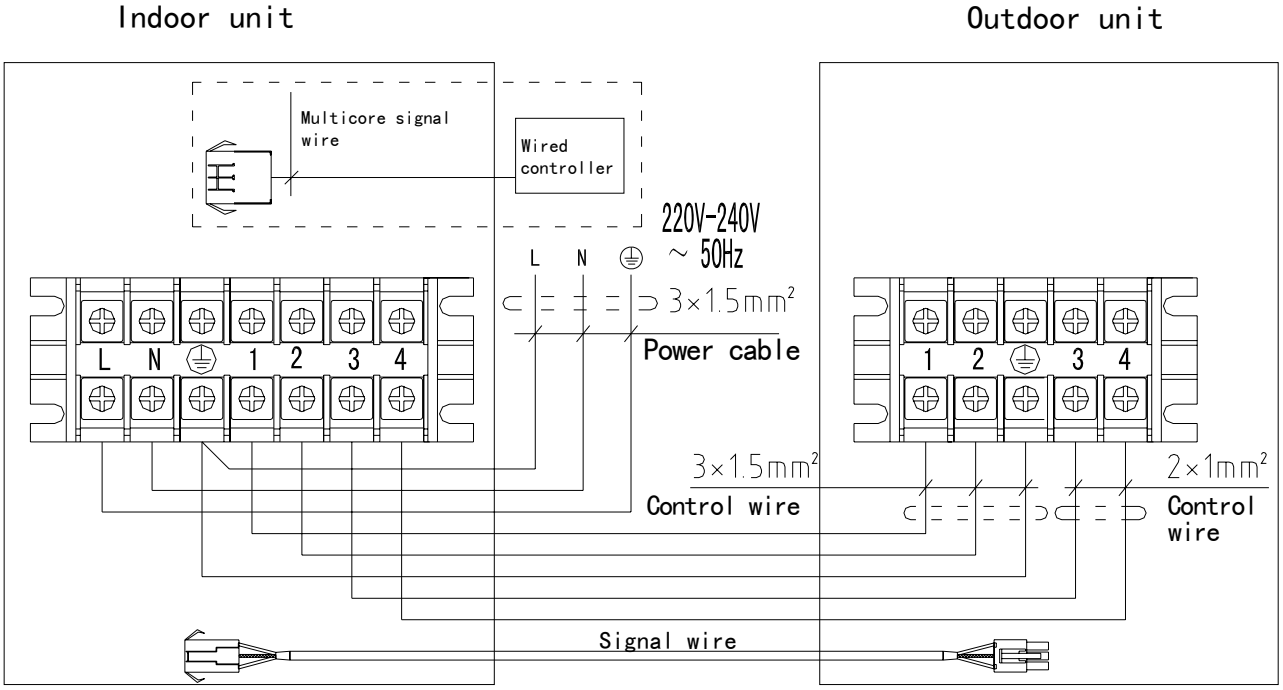

AICF-C12/4R1

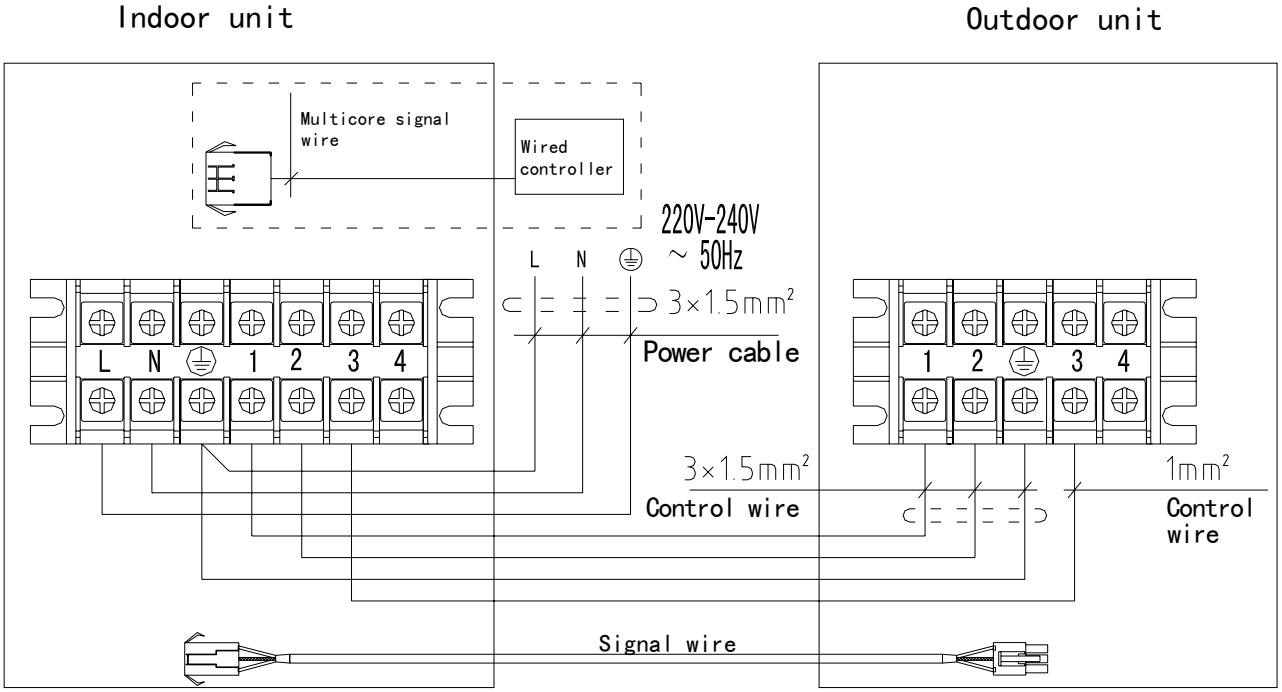

AICF-H18/4R1

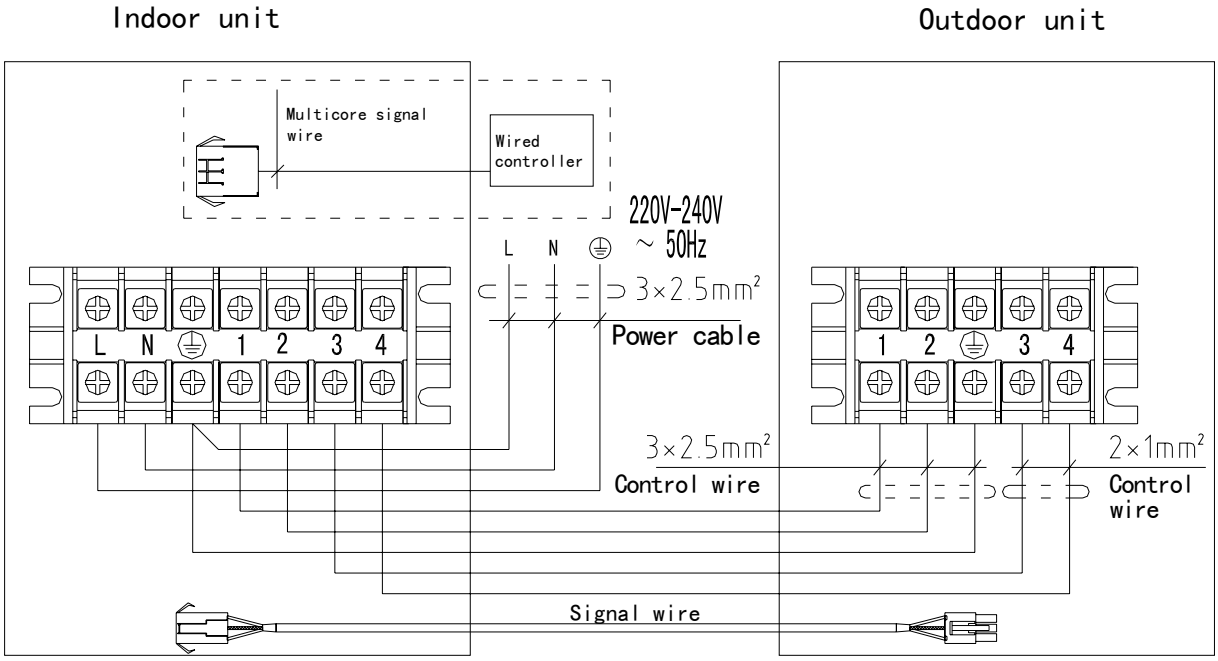

AICF-C18/4R1

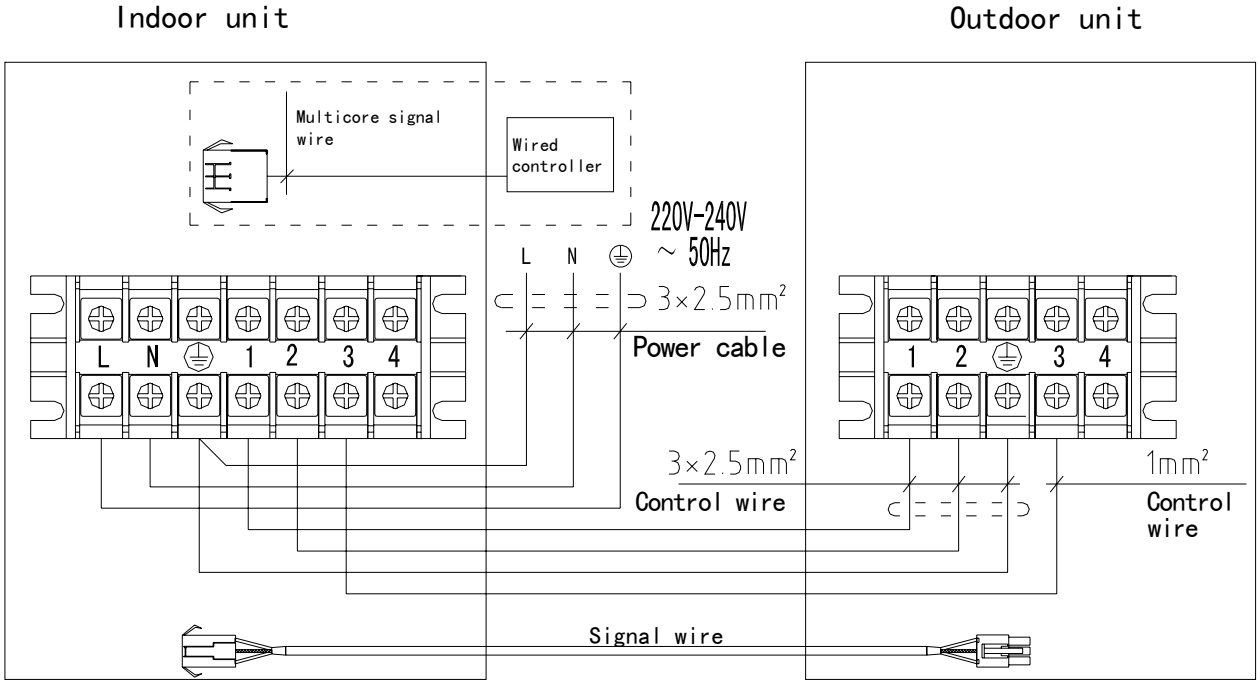

AICF-H24/4R1

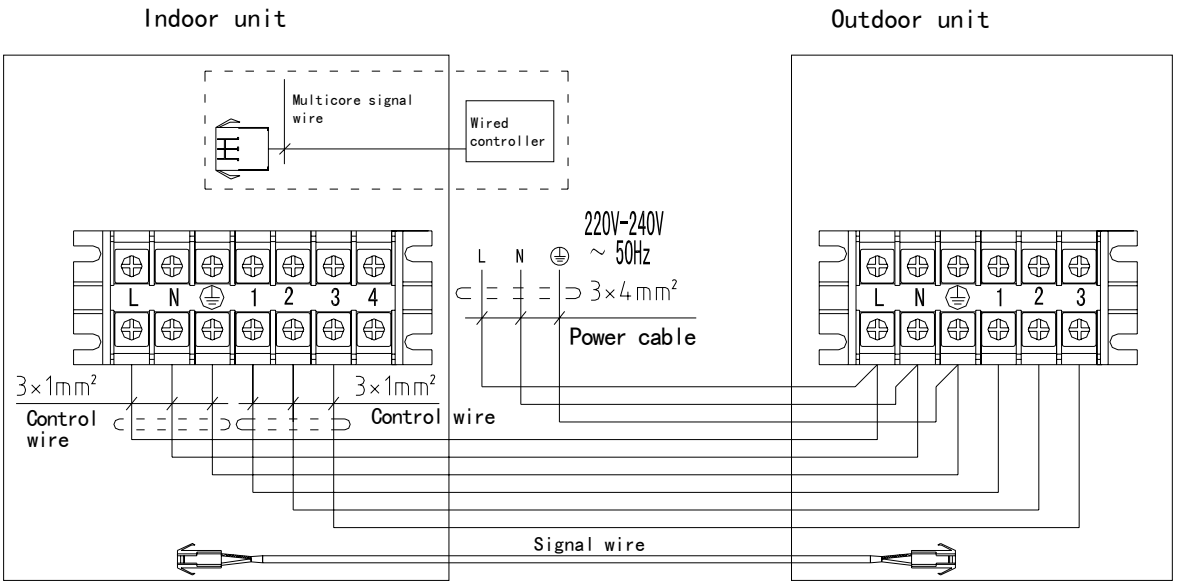

AICF-C24/4R1

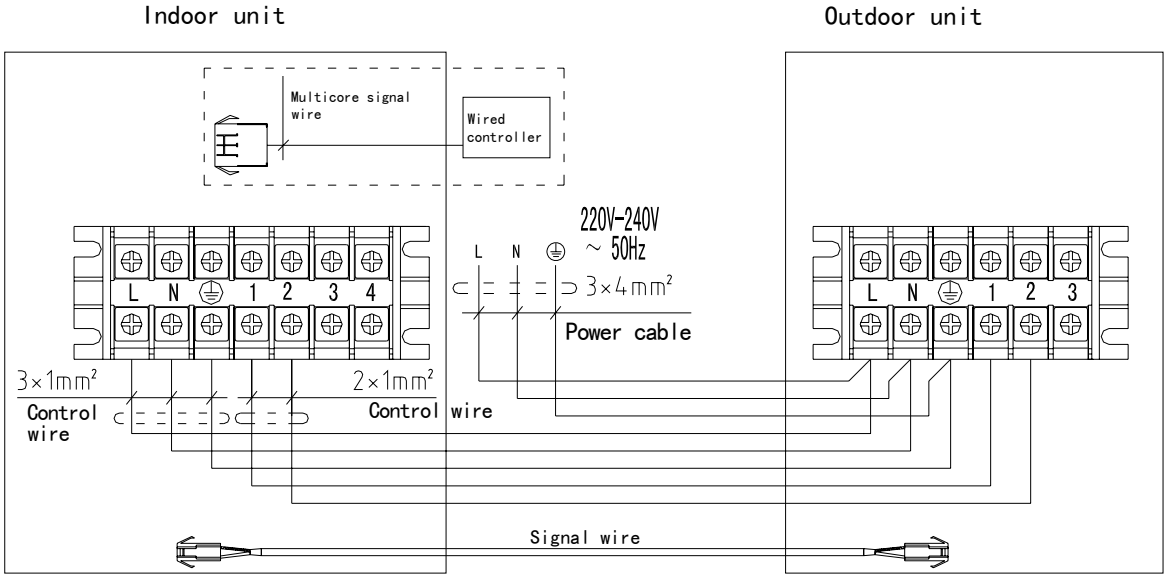

ALCF-C(H)36/5R1, ALCF-C(H)48/5R1, ALCF-C(H)60/5R1

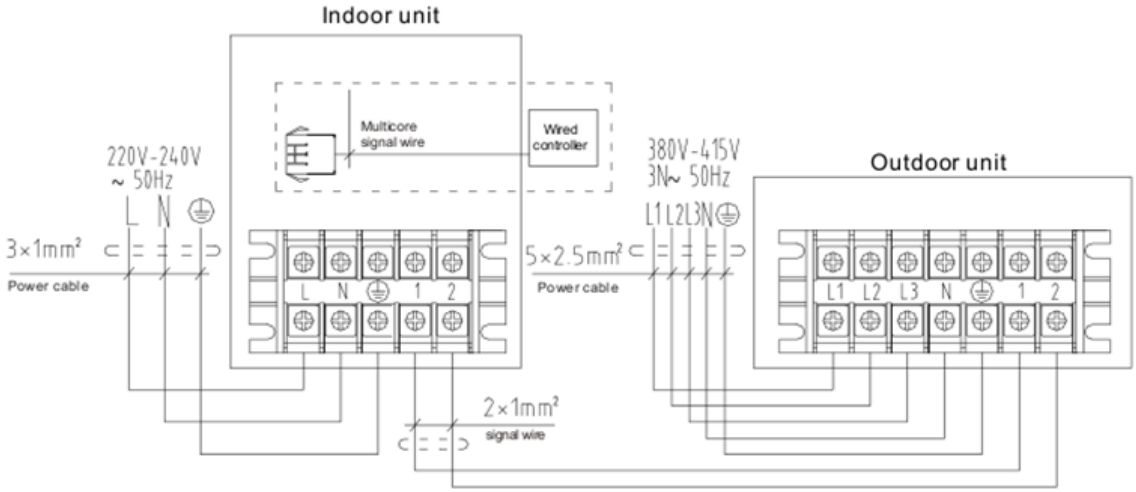

Introduction of Control Board sockets QRDL-3F(2S)-SYE1 (indoor unit) (match with the outdoor unit which the Power supply is 220V-240V, 1PH)

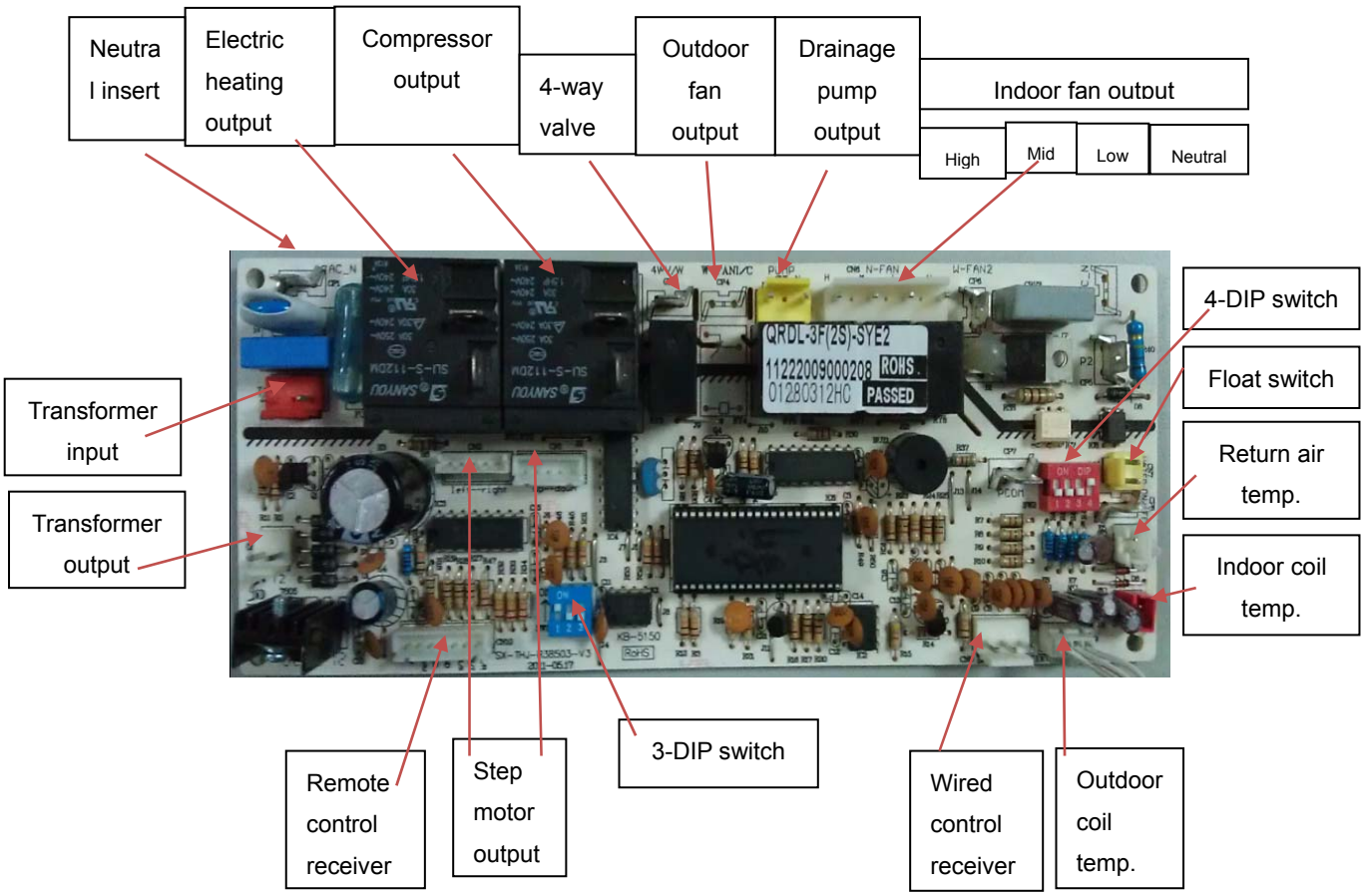

Introduction of control board QRD-SN3F(2S)-SYE1 sockets (Indoor unit) (match with the outdoor unit which the Power supply is 380V-415V, 3PH)

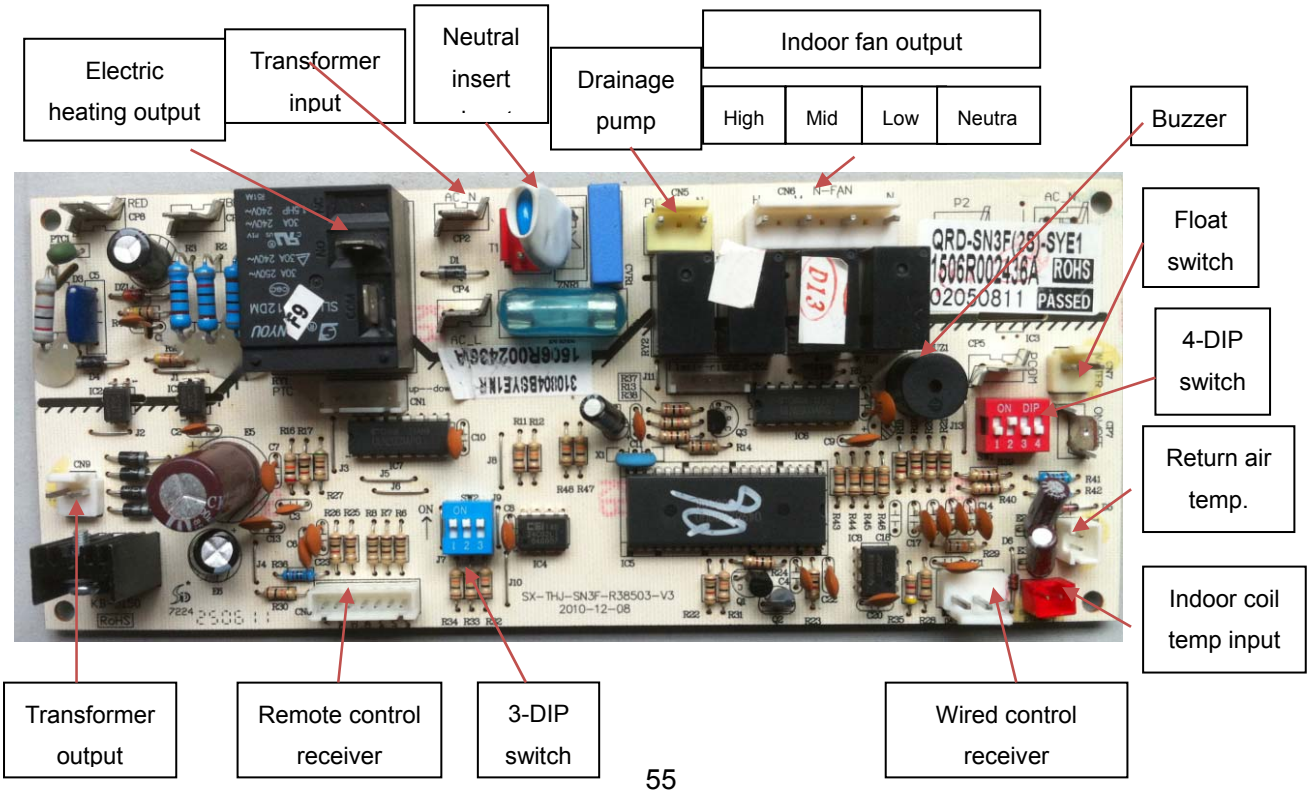

6. Installation

6.1 Preparation and equipments before installation

Please buy following spare parts from your local market before installation	Besides general implements, other implements are needed when connecting the pipe
Hung bolts M12, 4 pcs	Acetylene cylinders, oxygen cylinders (when longer pipe used it should be welded)
Drainage pipe PVC	One set pipe cut machine. (cut copper pipe)
Copper connecting pipe	Refrigerant cans, electronic balance (when longer pipe used additional gas should be charged)
Adhesive belt (big size) 5 pcs, (small size) 5 pcs	Pressure gauges, pipe clamp, welding torch, 2B silver electrode
Heat insulation material used to connect copper pipe (PE foam material, its thickness is more than 8mm)	Wrench 2 pcs, one of them is with adjustable torque wrench (42N.m,65N.m,100N.mm)
Power cable, electrical wire between indoor and outdoor unit(Must be in accordance with the wire diameter in the wiring diagram)	Nitrogen cylinder (in order to prevent oxidation when welding, using Nitrogen to replace the air)

6.2 The distance between indoor unit and obstacle

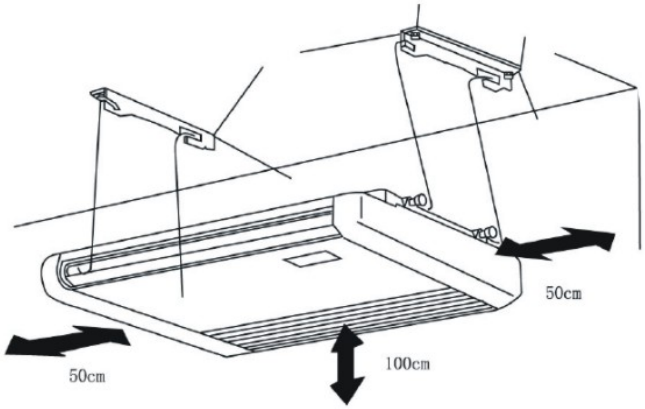

6.3 Indoor unit suspension

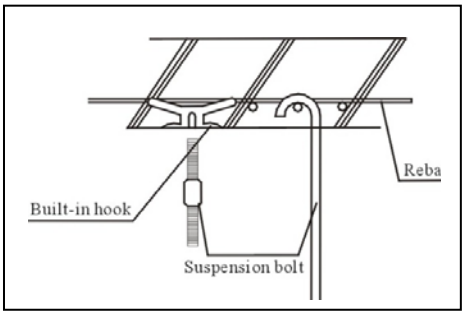

◇ Select the suspension foundation

◇ The suspension foundation is a structure of either wooden frame or reinforced concrete. It must be firm and reliable to bear at least 4 times weight of itself and capable of bearing vibration for long periods;
Fixing of suspension foundation

◇ Fix the suspension bolts either as shown in the picture or by a steel or wooden bracket;

◇ Adjust the relative positions of the suspension hooks to ensure the indoor unit is level in all directions. Use a spirit level to ensure this, otherwise

water leakage, air leakage etc. will be resulted;

◇ Tighten the nuts and ensure that the hooks are tightly connected to the nuts and sMDms, and there is no phenomenon of virtual hanging;

◇ After the unit is installed ensure it is secure and does not shake or sway.

6.4 Drainage pipe installation

◇The drain pipe should be properly insulated to prevent the generation of condensation, see picture as follows:

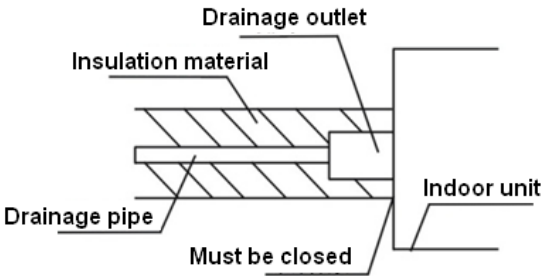

Heat insulation material: rubber insulation pipe with the thickness of more than 8mm

◇Drainage pipe must have a downward gradient (1 / 50 1 / 100).If the drain pipe is installed ups and downs, it will cause water backflow or leakage etc.

The pipe should not rise at any point.

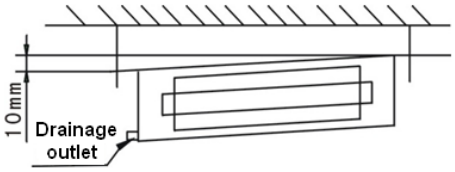

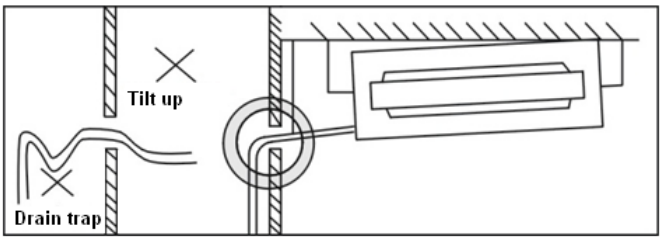

◇When finish installation,please carry out the drainage test to ensure that the water flow through the pipeline fluently, and carefully observe the junction to ensure that there is no water leakage at the junction. If the unit is installed in the newly built house, strongly recommend that this test taken before the ceiling installation. Even it is the heating only unit, this test is unavoidable.

7. Explode view

ALCF-C(H)12/4R1, ALCF-C(H)18/4R1

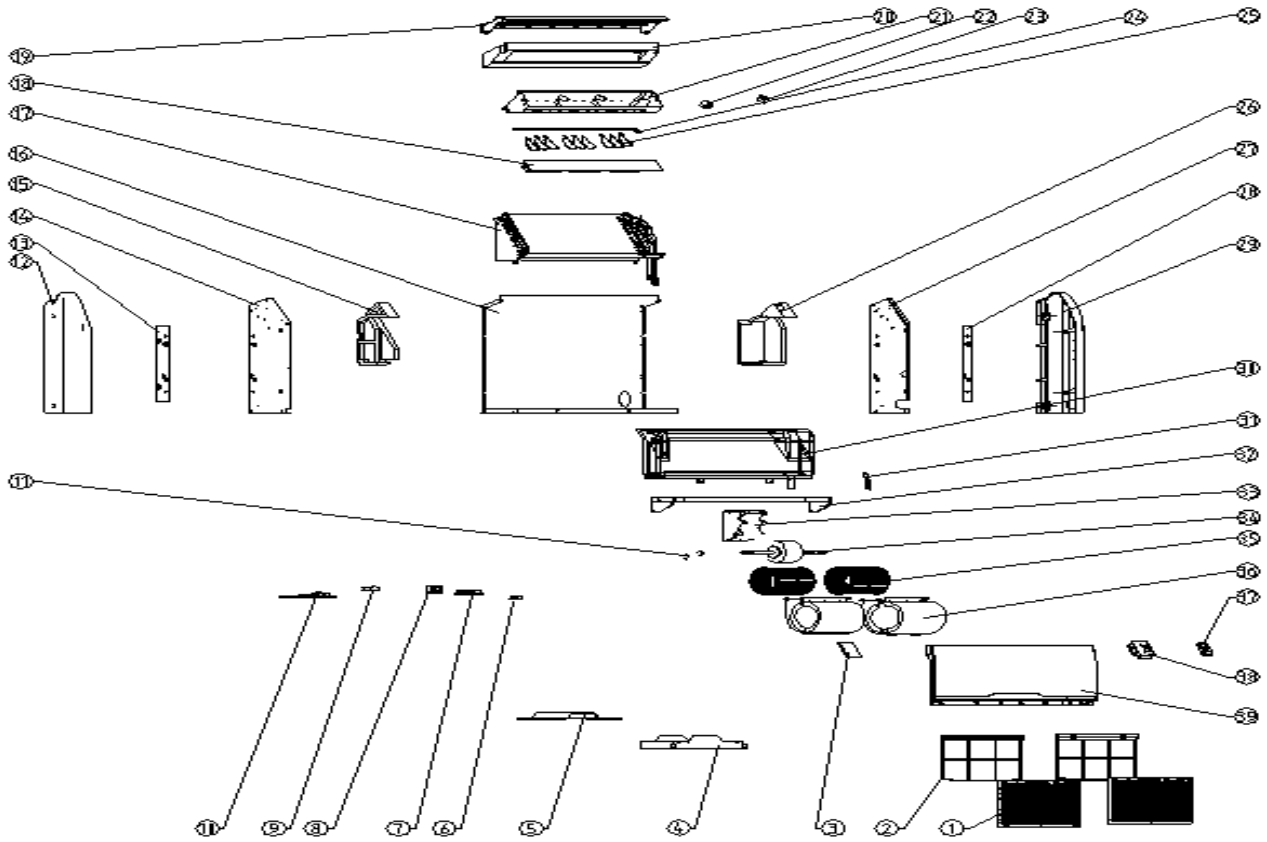

N0.	Chinese name	Part Name	Quantity	Unit
1	ALCF-H24/4 滤网	Air-inlet filter	2	Pcs
2	ALCF-H24/4 格栅	Air-inlet grill(white)	2	Pcs
3	ALCF-H24/4 左装饰板	Left side adornment plank	1	Pc
4	ALCF-H24/4 电控盒	The electricity controls a box	1	Set
5	ALCF-H24/4 电控盒盖	The electricity controls a box of cover	1	Pc
6	压线座 双联	Compress tightly electric wire seat	1	Pc
	压线盖 双联	Compress tightly electric wire cover	1	Pc
7	端子板 7 位(600V 4mm2)	Terminal board	1	Pc
8	(ROHS)变压器 TDB-8-B(PTC)	Transformer	1	Pc
9	(ROHS)电容 2.5μF/450V A.C	Capacitor	1	Pc
10	R 控制板 QRDL-3F(2S)-SYE1	PCB board	1	Pc
11,33,34	电机 YSK-40W-4	Motor	1	Pc
12	ALCF-H24/4 左盖板	The left side covers	1	Pc
13	ALCF-H24/4 左挂架	Left suspend plate	1	Pc
14	ALCF-H24/4 左侧板组件	Bracket board welding assembly of left-hand	1	Set
15	ALCF-H24/4 左泡沫	Left foam	1	Pc

16	ALCF-H18/4 背板组件	Chassis welding assembly	1	Set
17	ALCF-H18/4 蒸发器总成(片距 1.6)	Evaporator assembly	1	Set
18	ALCF-H18/4 导风门	Sway a breeze leaf	1	Pc
19	ALCF-H18/4 顶盖板	The crest covers plank	1	Pc
20	ALCF-H18/4 顶泡沫	Topmost foam	1	Pc
21	ALCF-H18/4 导风架	Air guide louver assembly	1	Set
22	步进电机 35BYJ46-QC120	Step motor	1	Pc
23	(ROHS)步进电机 35BYJ46-QC50	Step motor	1	Pc
24	ALCF-H24/4 垂直叶片连杆 A	Connect a pole	1	Pc
25	ALCF-H24/4 垂直叶片	Perpendicular blade	9	Pcs
26	ALCF-H24/4 右泡沫	Right foam	1	Pc
27	ALCF-H24/4 右侧板组件	Bracket board welding assembly of right-hand	1	Set
28	ALCF-H24/4 右挂架	Right suspend plate	1	Pc
29	ALCF-H24/4 右盖板	The Right side covers	1	Pc
30	ALCF-H18/4 集水盘组件	Draining tray	1	Set
31	排水保温管 QR-120N/A	Drain pipe	1	Pc
32	ALCF-H18/4 电机固定板	Volute fixing board	1	Pc
35	ALCF-H24/4 风轮组件	Centrifugal fan assembly	2	Sets
36	ALCF-H24/4 上蜗壳	Top plastics	2	Pcs
	ALCF-H24/4 下蜗壳	Low plastics	2	Pcs
37	R 显示灯板 SX-DISP(ZDJ)-02-SYE1	Display board	1	Pc
38	ALCF-H24/4 显示盒	Display board cover	1	Pc
39	ALCF-H18/4 面板	Front panel	1	Pc

ALCF-C(H)24/4R1,ALCF-C(H)36/5R1

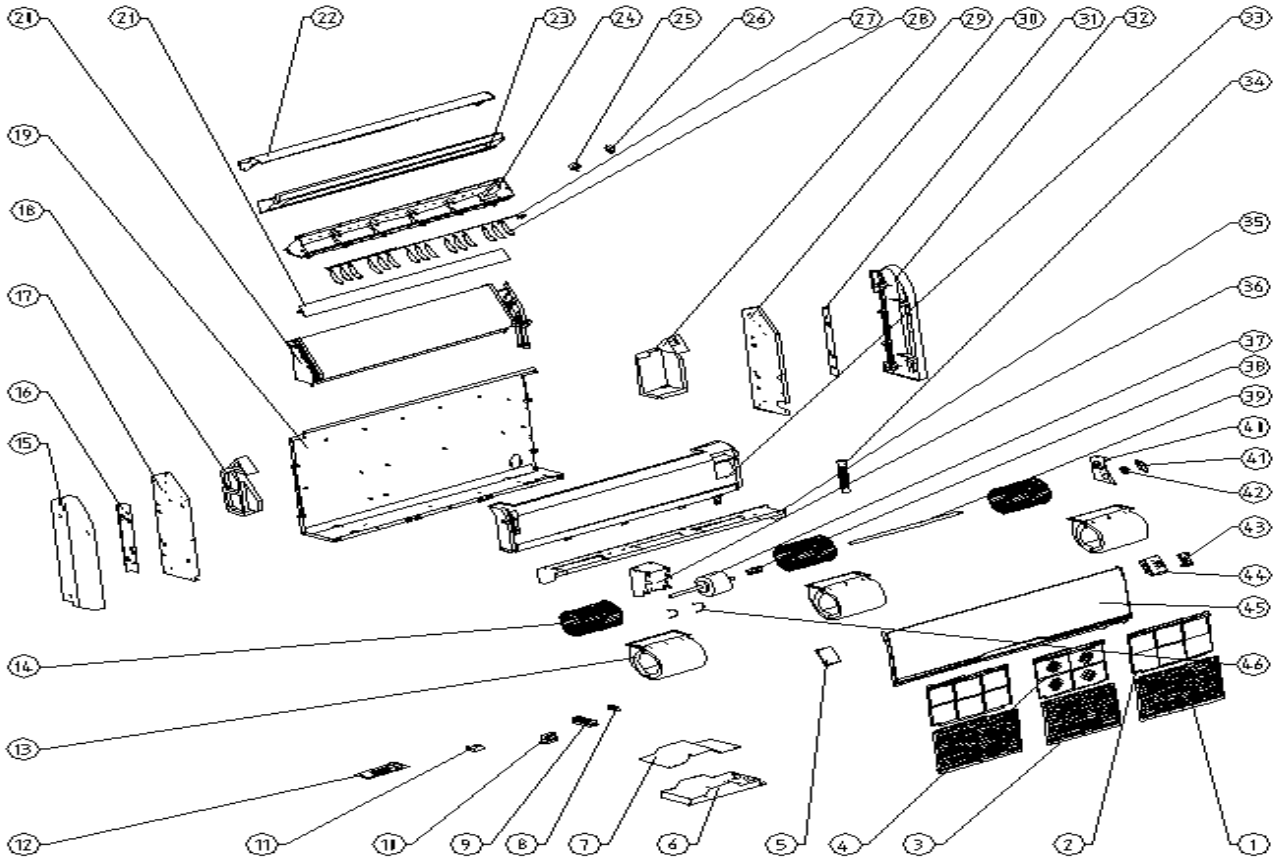

N0.	Chinese name	Part Name	Quantity	Unit
1	ALCF-H24/4 滤网	Air-inlet filter	2	Pcs
2	ALCF-H24/4 格栅	Air-inlet grill(white)	2	Pcs
3	ALCF-H24/4 中滤网	In the center filter net	1	Pc
4	ALCF-H24/4 中格栅	Air-inlet grill(white)	1	Pc
5	ALCF-H24/4 左装饰板	Left side adornment plank	1	Pc
6	ALCF-H24/4 电控盒	The electricity controls a box	1	Set
7	ALCF-H24/4 电控盒盖	The electricity controls a box of cover	1	Pc
8	压线座 双联	Compress tightly electric wire seat	1	Pc
	压线盖 双联	Compress tightly electric wire cover	1	Pc
9	端子板 7 位(600V 4mm2)	Terminal board	1	Pc
10	(ROHS)变压器 TDB-8-B(PTC)	Transformer	1	Pc
11	(ROHS)电容 4μF/450V A.C	Capacitor	1	Pc
12	R 控制板 QRDL-3F(2S)-SYE1	PCB board	1	Pc
13	ALCF-H24/4 上蜗壳	Top plastics	3	Pcs
	ALCF-H24/4 下蜗壳	Low plastics	3	Pcs
14	ALCF-H24/4 风轮组件	Centrifugal fan assembly	3	Sets
15	ALCF-H24/4 左盖板	The left side covers	1	Pc
16	ALCF-H24/4 左挂架	Left suspend plate	1	Pc
17	ALCF-H24/4 左侧板组件	Bracket board welding assembly of left-hand	1	Set

18	ALCF-H24/4 左泡沫	Left foam	1	Pc
19	ALCF-H24/4 背板组件	Chassis welding assembly	1	Set
20	ALCF-H24/4 蒸发器总成(片距 1.6)	Evaporator assembly	1	Set
21	ALCF-H24/4 导风门	Sway a breeze leaf	1	Pc
22	ALCF-H24/4 顶盖板	The crest covers plank	1	Pc
23	ALCF-H24/4 顶泡沫	Topmost foam	1	Pc
24	ALCF-H24/4 导风架	Air guide louver assembly	1	Set
25	步进电机 35BYJ46-QC120	Step motor	1	Pc
26	(ROHS)步进电机 35BYJ46-QC50	Step motor	1	Pc
27	ALCF-H24/4 垂直叶片连杆 A	Connect a pole	1	Pc
	ALCF-H24/4 垂直叶片连杆 B	Connect a pole	1	Pc
28	ALCF-H24/4 垂直叶片	Perpendicular blade	15	Pcs
29	ALCF-H24/4 右泡沫	Right foam	1	Pc
30	ALCF-H24/4 右侧板组件	Bracket board welding assembly of right-hand	1	Set
31	ALCF-H24/4 右挂架	Right suspend plate	1	Pc
32	ALCF-H24/4 右盖板	The Right side covers	1	Pc
33	ALCF-H24/4 集水盘组件	Draining tray	1	Set
34	排水保温管 QR-120N/A	Drain pipe	1	Pc
35	ALCF-H24/4 电机固定板	Volute fixing board	1	Pc
36,37,46	电机 YSK-70W-4	Motor	1	Pc
38	联轴器 Φ15	Motor coupling	1	Pc
39	ALCF-H24/4 加长轴	Motor lengthen axes	1	Pc
40	ALCF-H24/4 轴承固定座	Bearing base	1	Pc
41	GR-50D/DC2 橡胶轴承压板	Bearing top cover	1	Pc
42	GR-50D/DC2 橡胶轴承	Rubber bearings	1	Pc
43	R 显示灯板 SX-DISP(ZDJ)-02-SYE1	Display board	1	Pc
44	ALCF-H24/4 显示盒	Display board cover	1	Pc
45	ALCF-H24/4 面板	Front panel	1	Pc

ALCF-(H)48/5R1,ALCF-(H)60/5R1

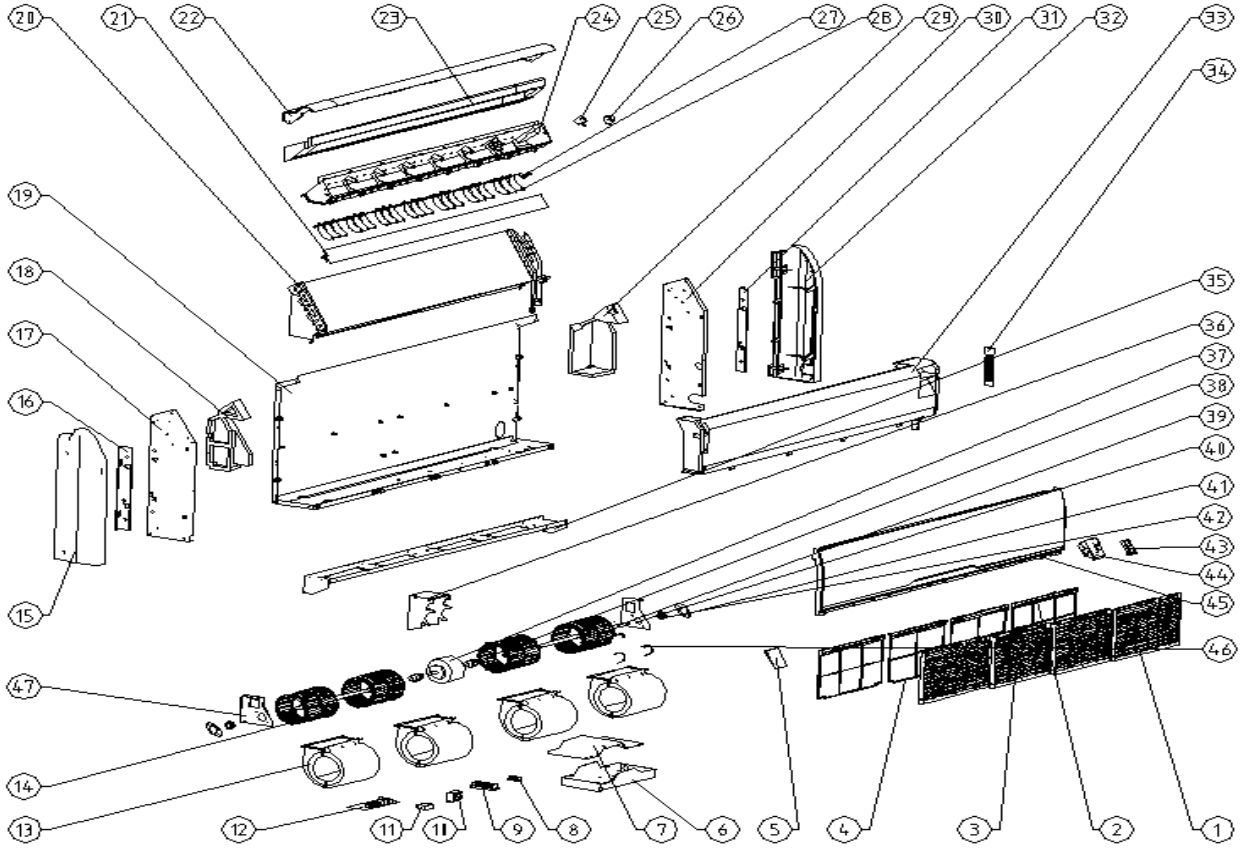

N0.	Chinese name	Part Name	Quantity	Unit
1	ALCF-H24/4 滤网	Air-inlet filter	2	Pcs
2	ALCF-H24/4 格栅	Air-inlet grill(white)	2	Pcs
3	ALCF-H24/4 中滤网	In the center filter net	2	Pcs
4	ALCF-H24/4 中格栅	Air-inlet grill(white)	2	Pcs
5	ALCF-H24/4 左装饰板	Left side adornment plank	1	Pcs
6	ALCF-H24/4 电控盒	The electricity controls a box	1	Set
7	ALCF-H24/4 电控盒盖	The electricity controls a box of cover	1	Pc
8	压线座 双联	Compress tightly electric wire seat	1	Pc
	压线盖 双联	Compress tightly electric wire cover	1	Pc
9	端子板 5 位(600V 4mm2)Ⅳ	Terminal board	1	Pc
10	(ROHS)变压器 TDB-8-B(PTC)	Transformer	1	Pc
11	(ROHS)电容 5μF/450V A.C	Capacitor	1	Pc
12	R 控制板 QRD-SN3F(2S)-SYE1	PCB board	1	Pc
13	ALCF-H24/4 上蜗壳	Top plastics	4	Pcs
	ALCF-H24/4 下蜗壳	Low plastics	4	Pcs
14	ALCF-H24/4 风轮组件	centrifugal fan assembly	4	Sets
15	ALCF-H24/4 左盖板	The left side covers	1	Pc
16	ALCF-H24/4 左挂架	Left suspend plate	1	Pc
17	ALCF-H24/4 左侧板组件	Bracket board welding assembly of left-hand	1	Set

18	ALCF-H24/4 左泡沫	Left foam	1	Pc
19	ALCF-H42/5 背板组件	Chassis welding assembly	1	Set
20	ALCF-H42/5 蒸发器总成(片距 1.6)	Evaporator assembly	1	Set
21	ALCF-H42/5 导风门	Sway a breeze leaf	1	Pc
22	ALCF-H42/5 顶盖板	The crest covers plank	1	Pc
23	ALCF-H42/5 顶泡沫	Topmost foam	1	Pc
24	ALCF-H42/5 导风架	Air guide louver assembly	1	Set
25	步进电机 35BYJ46-QC120	Step motor	1	Pc
26	(ROHS)步进电机 35BYJ46-QC50	Step motor	1	Pc
27	ALCF-H24/4 垂直叶片连杆 A	Connect a pole	1	Pc
	ALCF-H42/5 垂直叶片连杆	Connect a pole	1	Pc
28	ALCF-H24/4 垂直叶片	Perpendicular blade	21	Pcs
29	ALCF-H24/4 右泡沫	Right foam	1	Pc
30	ALCF-H24/4 右侧板组件	Bracket board welding assembly of right-hand	1	Set
31	ALCF-H24/4 右挂架	Right suspend plate	1	Pc
32	ALCF-H24/4 右盖板	The Right side covers	1	Pc
33	ALCF-H42/5 集水盘组件	Draining tray	1	Set
34	排水保温管 QR-120N/A	Drain pipe	1	Pc
35	ALCF-H42/5 电机固定板	Volute fixing board	1	Pc
36,37,46	电机 YSK-105W-4	Motor	1	Pc
38	联轴器 Φ15	Motor coupling	2	Pcs
39	ALCF-H24/4 加长轴	Motor lengthen axes	2	Pcs
40	ALCF-H24/4 轴承固定座	Bearing base	1	Pc
41	GR-50D/DC2 橡胶轴承压板	Bearing top cover	2	Pcs
42	GR-50D/DC2 橡胶轴承	Rubber bearings	2	Pcs
43	R 显示灯板 SX-DISP(ZDJ)-02-SYE1	Display board	1	Pc
44	ALCF-H24/4 显示盒	Display board cover	1	Pc
45	ALCF-H42/5 面板	Front panel	1	Pc
47	ALCF-H42/5 轴承固定座	Bearing base	1	Pc

Low static pressure duct type

1.Feature.....65

2.Specfication 67

3.Capacity Amendment 69

4.Demension 71

5.Electrical wiring and connection.....72

6.Fan performance.....75

7.Installation.....76

8.Explode view 79

1.Feature

Duct type air conditioner (Cooling-only or Heat pump), named for the Duct can be installed to Connect with air outlet and inlet. According to different ESP, it divides into Low ESP Duct type (12~30Pa), Medium ESP Duct type (50~80Pa) and high ESP Duct type (higher than 80P).

Application occasions:
Small super market, hotel, restaurant, office, meeting room and so on.

Features:
◇Conceal design, the unit is installed inside of ceiling, doesn't take room space, suitable for family and office place;
◇With Setting or Auto two operation modes, multi speed wind, makes you feel more comfortable;
◇There are red and white two teminals for motor wiring, users can adjust the ESP by changing the terminals to meet different requirements, simple and convenient; Low ESP Duct is 12/30Pa, and Medium ESP Duct is 50/80Pa, the default setting is 12/30Pa;
◇Special insulation design, achieces high heat insulation efficiency, and no condensation on shell; ◇ Low noise centrifugal fan, strong wind but quiet operation;
◇3-phase power supply type units with low ambient temperature cooling function, which makes the unit can run normally on the condition that the ambient temperature falls down to -15℃;
◇Auto restart;
◇Standard wired controller and optional remote controller;
◇Auxiliary electric heater for heat pump unit, with fast heating and low ambient temperature heating functions;
◇Failure automatic detection, if there is a failure, the indicator will flash and the failure code will display on the wired controller, the failure cause is easier to be found..

Function introduction

Type	Item	ALLD-C(H)12/4R1
Protection functions	High pressure protection	—
	Low pressure protection	—
	Compressor overload protection	●
	Exhaust high temperature protection	—
	Phase protection(Phase-loss, phase- reverse)	—
	Overheating protection	●
	Prevent frostbite protection	●
	Sensor failure alarm	●
	Malfunction display function	●
Comfort	Cooling	●
	Heating	●
	Three speed	●
	Adjusted static pressure	—
	Auto-restart function(Optional)	●
	Anti-cold wind	●
	Afterheat wind blowing	●
	Timing on/off function	●
Operation	Clock display	●
	Running mode display	●
	Fan speed display	●
	Defrost display	●
	Timing on/off display	●
	Wind angle display	●
	Sleeping display	●
Running	Automatic running	●
	Dehumidify running	●
	Automatic defrost	●
	Ventilation function	●
	Low ambient cooling function	●
Health	Knock-down air filter	●
	Fresh air obligate function	—
Installation	Left /right side drainage(optional)	●
	Left/right side connected with the pipe (optional)	●
	Back/down air suction (optional)	●
	Guide board for collocating and installation	—

Remarks:● Stands for “YES” — Stands for “NO”

2.Specfication

Model	Indoor		ALLD-C12/4R1	ALLD-H12/4R1
	Outdoor		AL-C12/4R1(U)	AL-H12/4R1(U)
Factory Model	Indoor		ALDu-12A4/R1-S3	ALDu-H12A4/R1-S3
	Outdoor		AL-12A4/R1(T)	AL-H12A4/R1(T)
Power Supply		V~,Hz,Ph	220~240,50,1	220~240,50,1
Capacity	Cooling	Btu/h	12000	12000
		kW	3.6	3.6
	Heating	Btu/h	/	13500
		kW	/	3.9
Electric Data	Rated Cooling Power Input	kW	1.09	1.09
	Rated Heating Power Input	kW	/	1.06
	Rated Cooling Current	A	4.99	4.99
	Rated Heating Current	A	/	4.85
Performance	EER	W/W	3.30	3.30
	COP	W/W	/	3.68
Indoor Fan Fotor	Model		YSK22-4	YSK22-4
	Brand		HUATE	HUATE
	Output Power x Fan quantity	W	22*1	22*1
	Capacitor	uF	1	1
	Speed (Hi/Mi/Lo)	r/min	750/680/650	750/680/650
Indoor Coil	Number Of Row		2	2
	Tube Pitch(a)x Row Pitch(b)	mm	20.5×12.7	20.5×12.7
	Fin Spacing	mm	1.4	1.4
	Fin Material		Hydrophilic aluminum fin	
	Tube Outside Dia.and Material	mm	φ7,Inner grooved	φ7,Inner grooved
	Coil Length x Height x Width	mm	685×205×25.4	685×205×25.4
	Heat Exchanging Area	m^2	4.53	4.53
Indoor Unit	Indoor Air Flow (Hi/Mi/Lo)	m^3/h	630/504/441	630/504/441
	Noise Level(Hi/Mi/Lo)	dB(A)	38/35/29	38/35/29
	External Static Pressure	Pa	12/30	12/30
	Net Dimension (W*H*D)	mm	880×528×240	880×528×240
	Packing Dimension (W*H*D)	mm	980×620×280	980×620×280
	Net Weight	Kg	21.5	21.5
	Gross Weight	Kg	25	25
Refrigerant Pipe	Liquid Side	mm	6.35	6.35
	Gas Side	mm	12.7	12.7
	Max. Refrigerant Pipe Length	m	15	15
	Max. Difference In Level	m	10	10
Operation Temperature Range		℃	16~32	16~32
Ambient Temperature Range(Cooling/Heating)		℃	-5~49	-5~49/-15~24
Application Area		m^2	13-21	13-21

Connection Wiring	Power Wiring(Indoor)	mm^2	$3\times1.5mm^2$	$3\times1.5mm^2$
	Power Wiring(Outdoor)	mm^2	/	/
	Signal Wiring	mm^2	$3\times1.5mm^2+1mm^2$	$3\times1.5mm^2+2\times1mm^2$
Wireless Remote Controller			G-XK-HCE3	G-XK-HCE3
Qty'per 20'& 40'&40HQ(Only For Reference)		Set	64/134/168	64/134/168

Note:

1. Working condition of the cooling capacity measured: Inside the room DB temperature 27℃,WB temperature19℃;Outside of the room DB temperature 35℃,WB temperature 24℃;Working condition of the heating capacity measured:Inside the room DB temperature 20℃,Outside of the room DB temperature 7℃,WB temperature 6℃。
2. Parameters above are all measured when the connecting pipe is 5 meters.
3. Parameters above may be modified as product improvement. We keep the right to change the product specifications without prior notice, please take the parameters listed on the nameplate as criterion.

3 Capacity Amendment

3.1 Running range

Cooling capacity (Btu/h)		12000
Power supply		220-240V~/50Hz
Voltage		187~242V
Ambient temperature	Cooling	-5~49℃
	Heating	-15~24℃

3.2 Amendment coefficient of cooling capacity under different indoor/outdoor DB and WB temperature

Indoor air inlet temperature℃		Outdoor air inlet DB temperature℃				
DB	**WB**	**25**	**30**	**35**	**40**	**43**
23	16	0.98	0.94	0.89	0.85	0.82
25	18	1.05	1	0.95	0.90	0.87
27	19	1.1	1.05	1	0.95	0.91
28	20	1.12	1.07	1.02	0.96	0.93
30	22	1.19	1.13	1.08	1.02	0.99
32	24	1.26	1.20	1.15	1.08	1.05

Actual cooling capacity calculation:

Actual cooling capacity=amendment coefficient of cooling capacity × nominal cooling capacity

——nominal cooling capacity could be found from the performance parameters list

——amendment coefficient of cooling capacity could be found from table above.

3.3 Amendment coefficient of heating capacity under different indoor/outdoor DB and WB temperature

Indoor air inlet DB temperature ℃	Outdoor air inlet WB temperature ℃				
	-5	0	6	10	15
16	0.65	0.80	1.02	1.13	-
18	0.61	0.76	1.02	1.12	-
20	0.6	0.75	1	1.11	1.25
21	0.59	0.72	0.99	1.1	1.24
22	0.58	0.71	0.97	1.09	1.23
24	0.56	0.7	0.96	1.08	1.22

Actual heating capacity calculation:

Actual heating capacity=amendment coefficient of heating capacity × nominal heating capacity

——nominal heating capacity could be found from the performance parameters list

——amendment coefficient of heating capacity could be found from table above.

3.4 Amendment coefficients of heating and cooling capacity under different height drop

Different Cooling Capacity modified coefficients at different height:

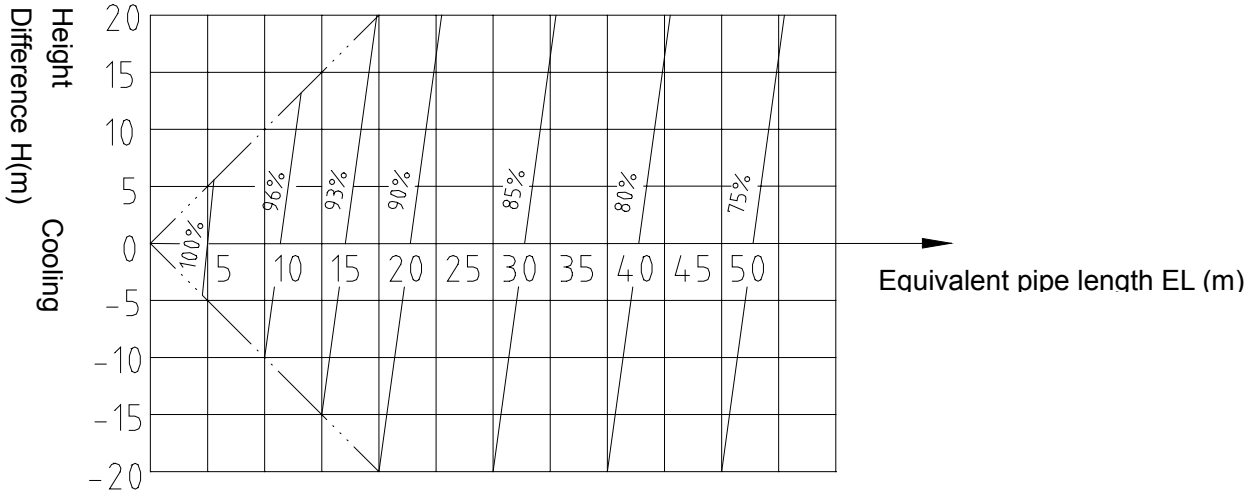

Note: H = Height of Outdoor Unit － Height of Indoor Unit

3.5 Different Heating Capacity modified coefficients at different height:

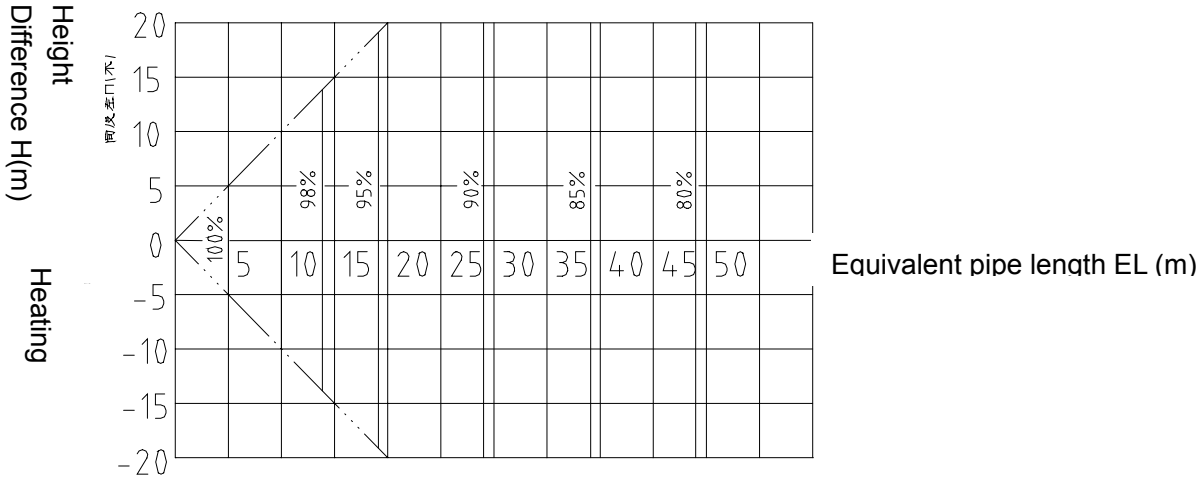

Note: H = Height of Outdoor Unit － Height of Indoor Unit

4 Demension

ALLD-C(H)12/4R1

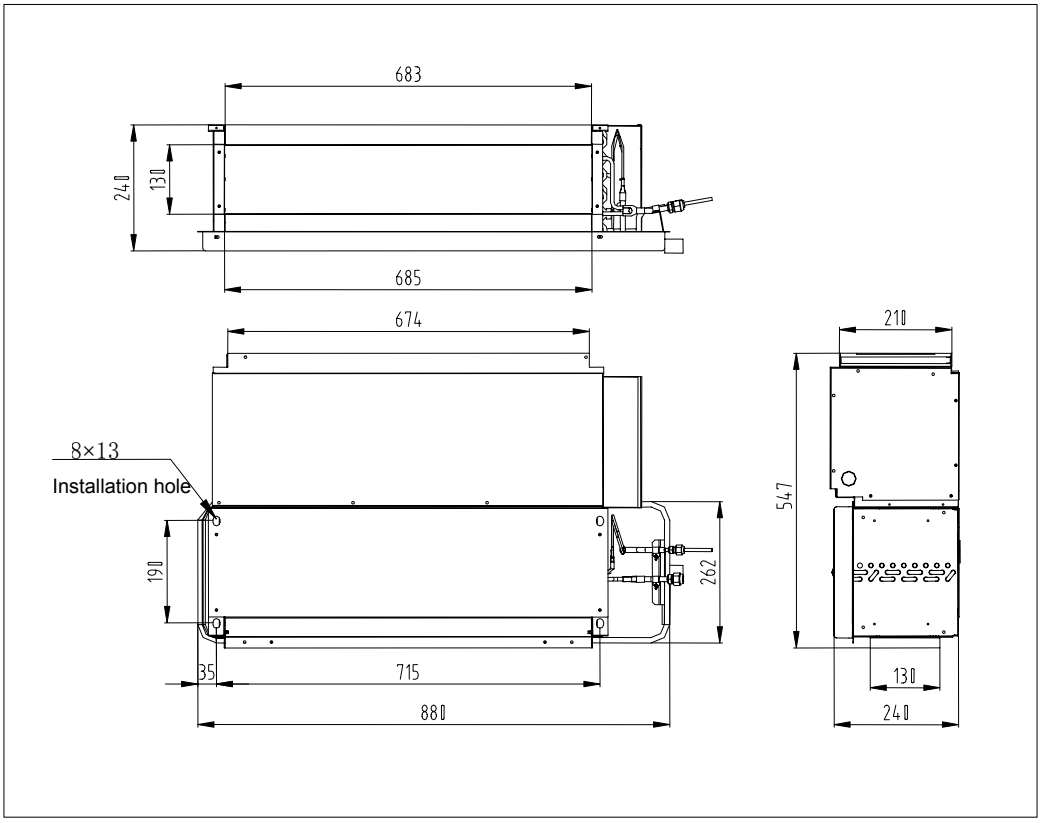

5. Electrical wiring and connection

ALLD-H12/4R1

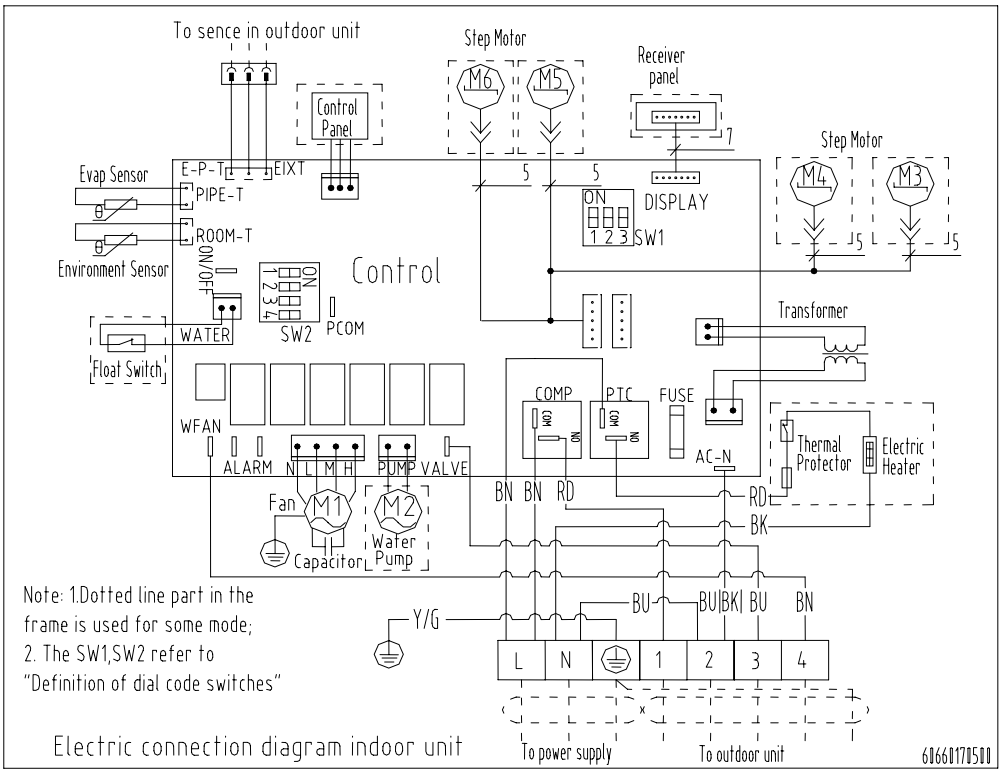

ALLD-C12/4R1

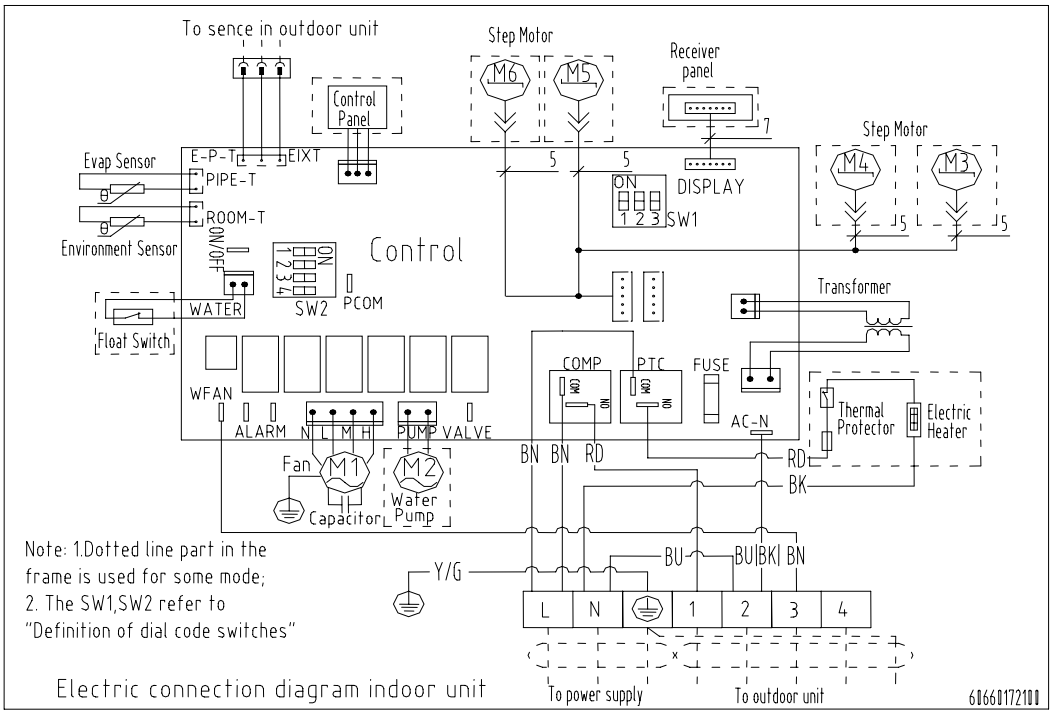

Electrical connection

ALCA-H12/4R1

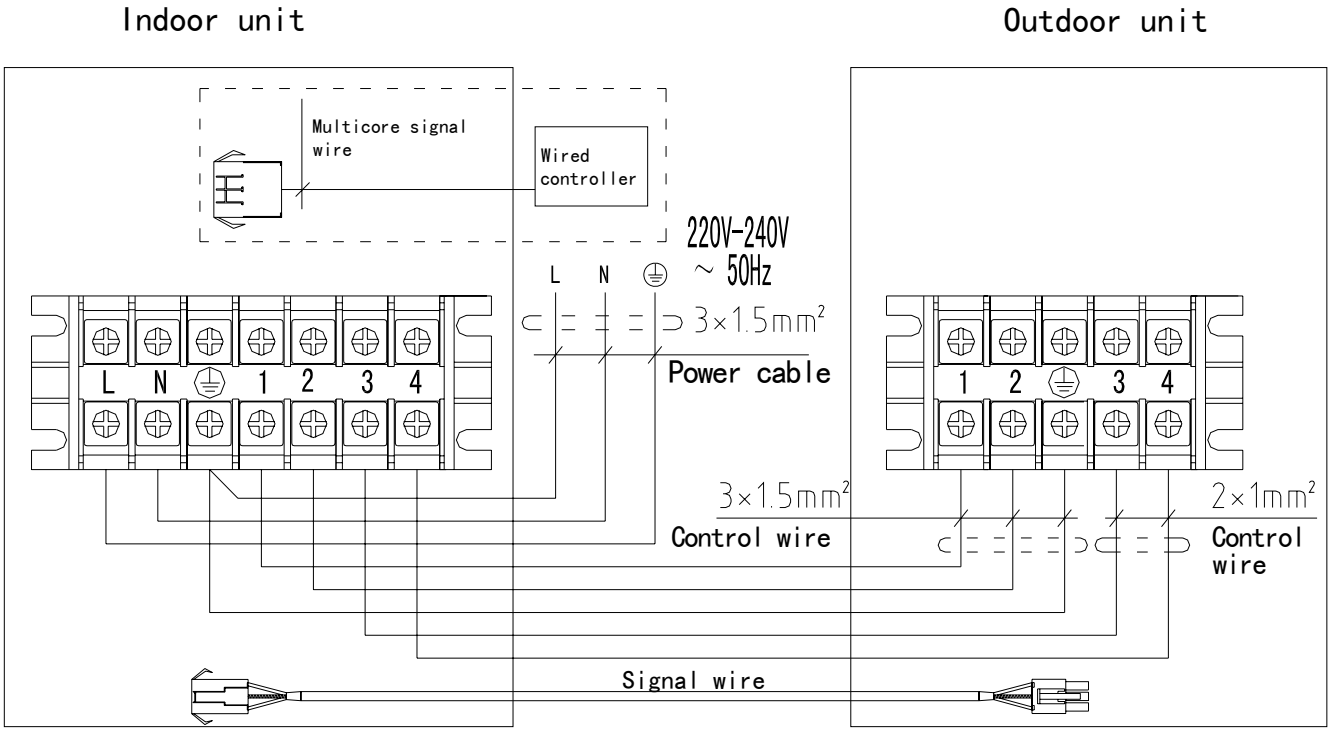

ALLD-C12/4R1

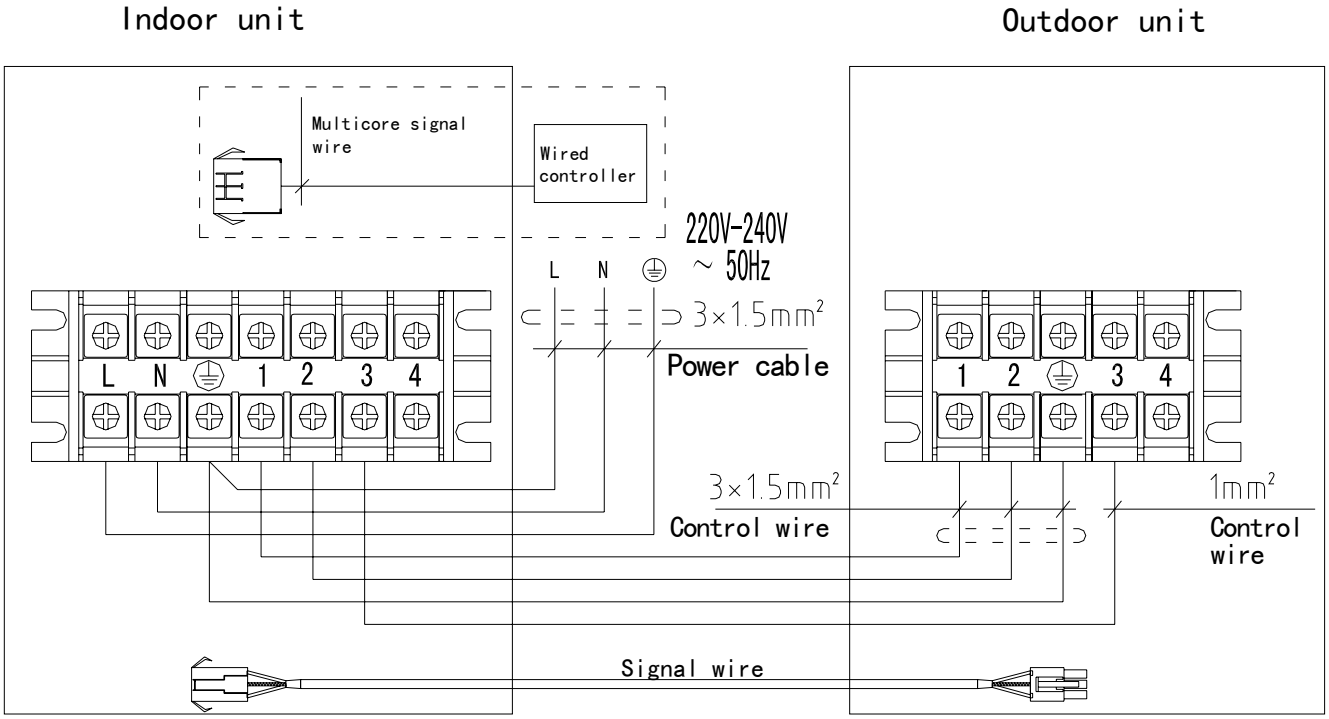

Introduction of Control Board sockets QRDL-3F(2S)-SYE1 (indoor unit) (match with the outdoor unit which the Power supply is 220V-240V, 1PH)

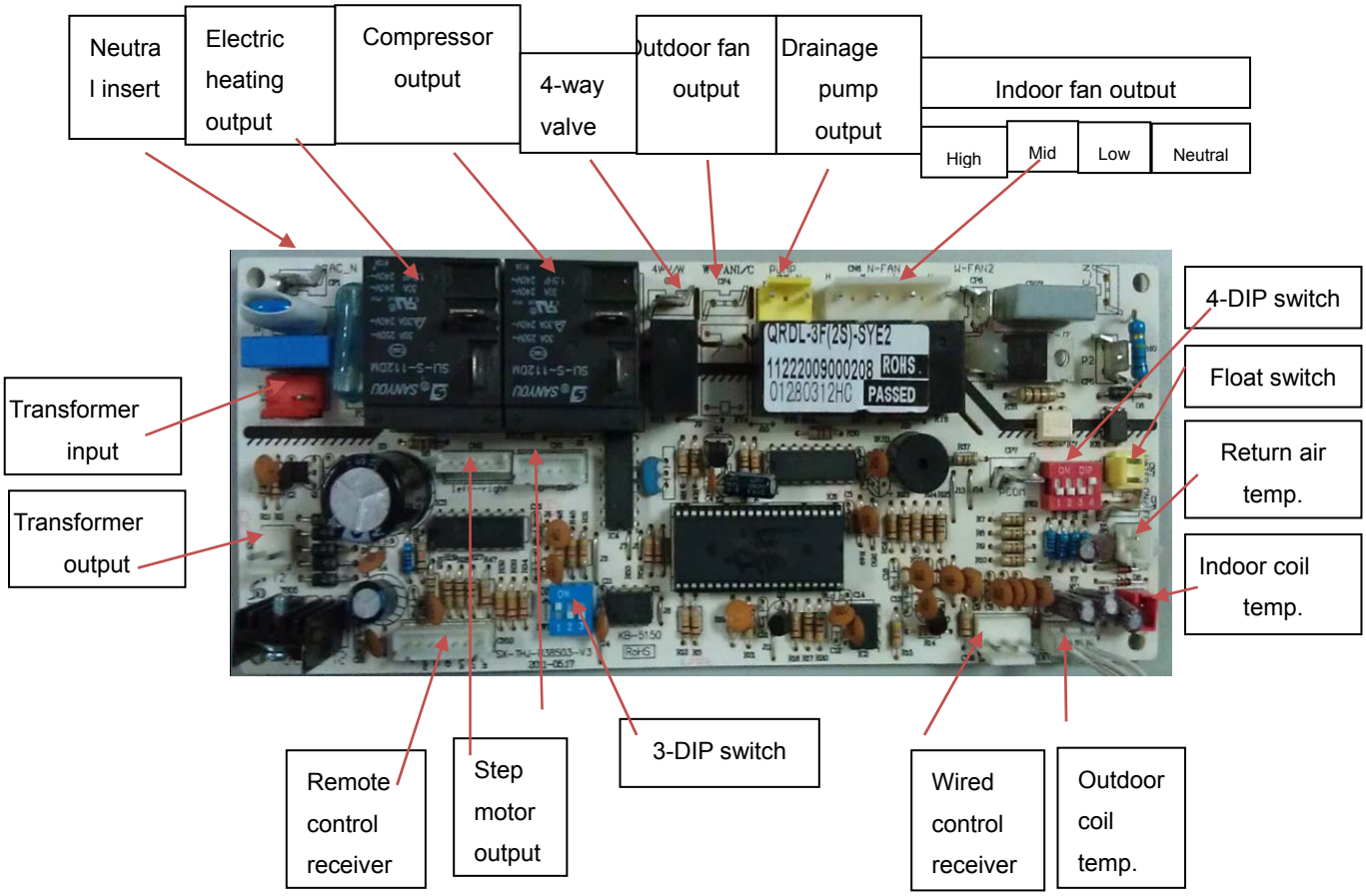

6.Fan performance

ALLD-C(H)12/4R1

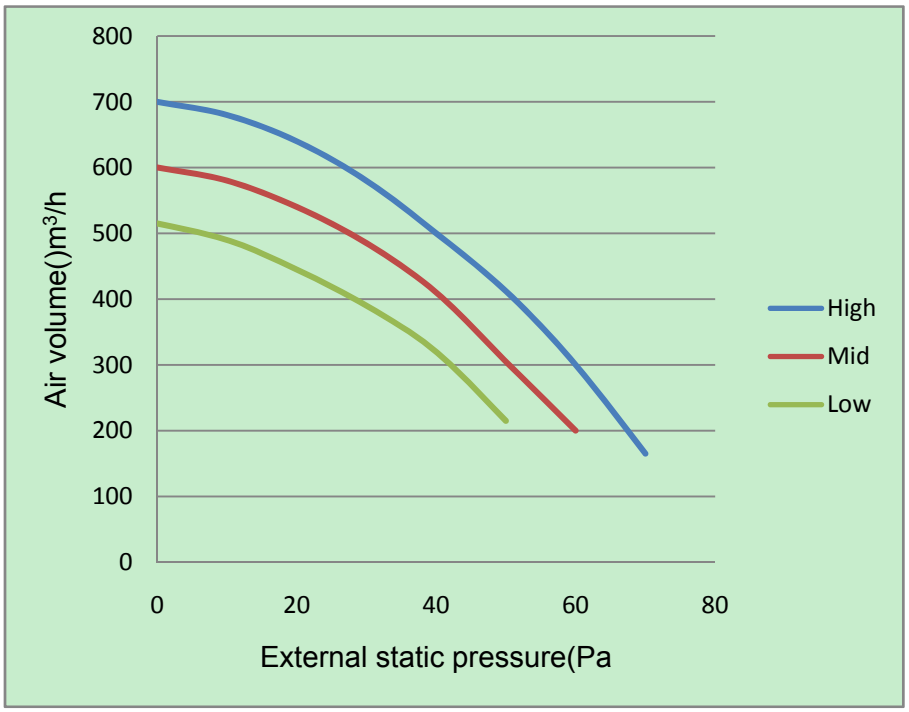

7. Installation

7.1 Preparation and equipments before installation

Please buy following spare parts from your local market before installation	Besides general implements, other implements are needed when connecting the pipe
Hung bolts M12, 4 pcs	Acetylene cylinders, oxygen cylinders (when longer pipe used it should be welded)
Drainage pipe PVC	One set pipe cut machine. (cut copper pipe)
Copper connecting pipe	Refrigerant cans, electronic balance (when longer pipe used additional gas should be charged)
Adhesive belt (big size) 5 pcs, (small size) 5 pcs	Pressure gauges, pipe clamp, welding torch, 2B silver electrode
Heat insulation material used to connect copper pipe (PE foam material, its thickness is more than 8mm)	Wrench 2 pcs, one of them is with adjustable torque wrench (42N.m,65N.m,100N.mm)
Power cable, electrical wire between indoor and outdoor unit(Must be in accordance with the wire diameter in the wiring diagram)	Nitrogen cylinder (in order to prevent oxidation when welding, using Nitrogen to replace the air)

7.2.The distance between indoor unit and obstacle

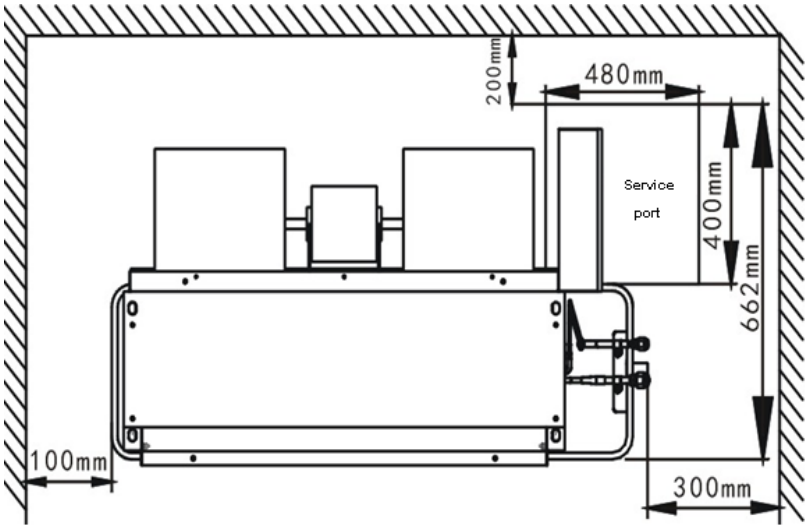

7.3 Indoor unit suspension

Select the suspension foundation

The suspension foundation is a structure of either wooden frame or reinforced concrete. It must be firm and reliable to bear at least 4 times

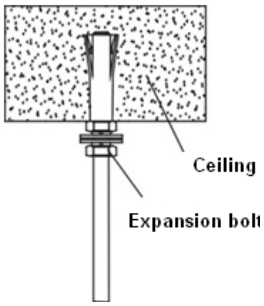

◇ weight of itself and capable of bearing vibration for long periods;
Fixing of suspension foundation
Fix the suspension bolts either as shown in the picture or by a steel or wooden bracket;

◇ Adjust the relative positions of the suspension hooks to ensure the indoor unit is level in all directions. Use a spirit level to ensure this, otherwise water leakage, air leakage etc. will be resulted;

◇ Tighten the nuts and ensure that the hooks are tightly connected to the nuts and shims, and there is no phenomenon of virtual hanging;

◇ After the unit is installed ensure it is secure and does not shake or sway.

7.4 duct pipeline installation

◇Using canvas to connect between indoor unit and duct pipeline, in order to save unnecessary vibration .

◇Duct pipeline connection can be divided into two kinds, one is back air return and the other is below air return, as to the detail connection method, please refer to the following picture.

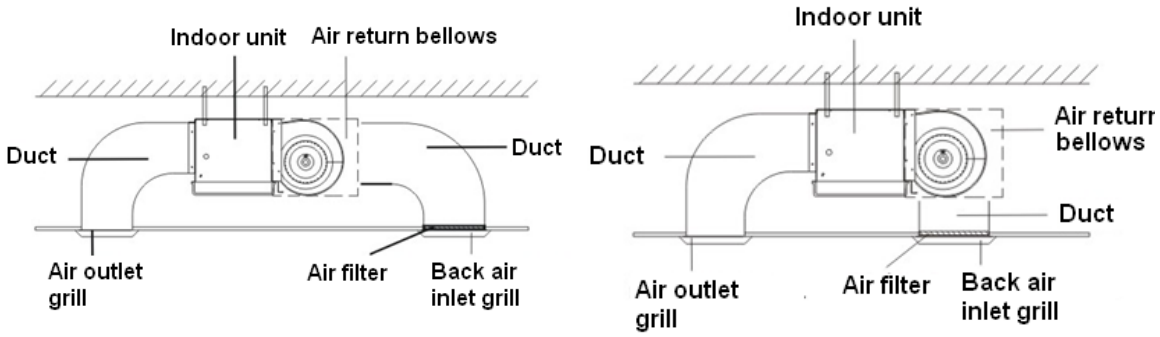

7.5 Drainage pipe installation

◇Drainage pipes must be wrapped with heat insulation materials, otherwise it will cause frost or droplets, see picture as follows:

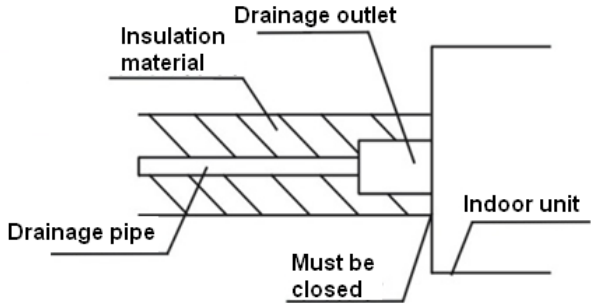

Heat insulation material: rubber insulation pipe with the thickness of more than 8mm

◇Drainage pipe must have a downward gradient (1 / 50 1 / 100).If the drain pipe is installed ups and downs, it will cause water backflow or leakage etc.

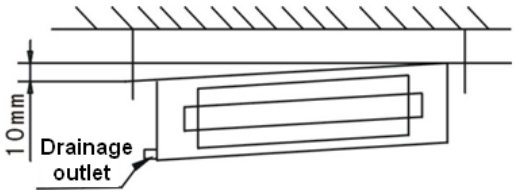

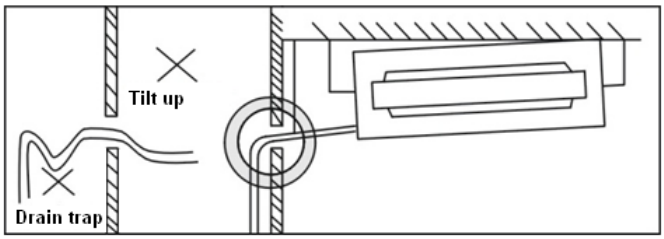

◇When finish installation please carry out the drainage test to ensure that the water flow through the pipeline fluently, and carefully observe the junction to ensure that there is no water leakage at the junction. If the unit is installed in the newly built house, strongly recommend that this test taken before the ceiling installation. Even it is the heating only unit, this test is unavoidable.

7.6 Remote controller receiver installation.

◇Installation site: recommend that the receiver is mounted with the distance of 30~50 cm to the indoor unit air outlet (on your choice as well), while must ensure that the receiver can get the signal that the remote controller sends, please refer to the following installation picture:

◇Mounting hole set up: please use certain instrument to dig a square hole with 88*88mm on the ceiling

◇Remote controller receiver installation.

Hold the two sides (with clip sides) of the receiver, set the spring clip in the vertical way then insert it into the mounting hole, if the two sides of the receiver is in the same level with the ceiling the installation is finished.

◇Signal wire connection: connect the wire of remote controller receiver to the CN-DISP terminal on PCB of indoor unit electrical connection box then fix it.

8 Explode view

ALLD-C(H)12/4R1

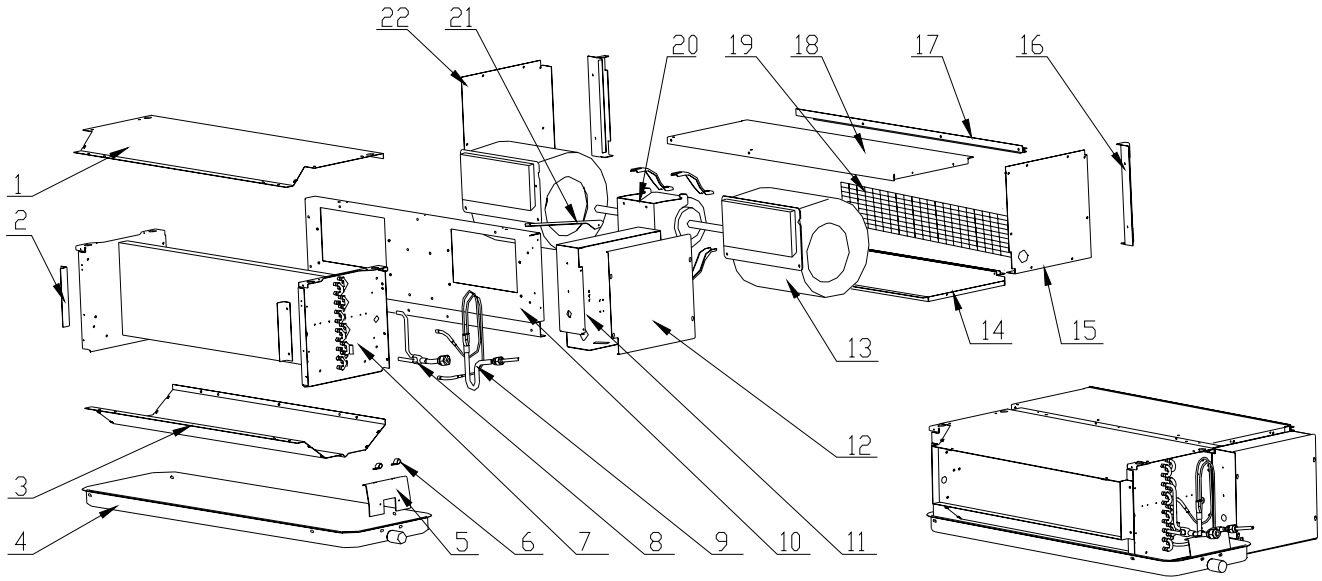

ALLD-C(H)12/4R1 spare parts list

N0.	Chinese name	Part Name	Quantity	Unit
1	顶盖板	Top cover board	1	Pc
2	出风法兰短条	Outlet flange	2	Pcs
3	底盘	Chassis	1	Pc
4	接水盘	Drip tray	1	Pc
5	阀板	Valve board	1	Pc
6	管夹φ9.52	Pipe Clampφ9.52	2	Pcs
7	蒸发器组件	Evaporator assembly	1	Set
8	蒸发器出气管组件	evaporator liquid input pipe assembly	1	Set
9	蒸发器进液管组件	evaporator gas output pipe assembly	1	Set
10	蜗壳固定板	Centrifugal fan fasten board	1	Pc
11	电控盒总成	Electric assembly	1	Sets
11.1	控制板	PCB board	1	Pc
11.2	变压器 QC2-E1	Transformer	1	Pc
11.3	回风温度传感器	Sensor 5K3470 1	1	Pc
11.4	盘管温度传感器	Sensor 5K3470 2	1	Pc
11.5	端子板 7位	Terminal board	1	Pc
11.6	电控盒	Electric components box	1	Set
12	电控盒盖	Cover for electric components	1	Pc
13	离心风机	Centrifugal fan motor	2	Pcs
14	回风箱下后板组件	Wind-box underside board	1	Set
15	回风箱右侧板	Wind-box right board	1	Pc
16	回风箱导风短条	Wind-box flange	2	Pcs

17	回风箱滑道组件	Wind-box slideway assembly	1	Set
18	回风箱顶板	Wind-box Top cover board	1	Pc
19	缝制过滤网 665×204×6mm	Air filter 665×204×6mm	1	Pc
20	室内风扇电机 YSK-30-4	Fan motor YSK-30-4	1	Pc
21	电控盒支撑板	Electric box bracket	1	Pc
22	回风箱左侧板	Wind-box left board	1	Pc

Middle static pressure duct type

1. Feature.....82

2. Specfication 84

3. Capacity amendment.....90

4. Dimension 92

5. Electrical wiring and connection.....93

6. Fan performance.....99

7. Installation.....101

8. Explode view.....104

1 Feature

Duct type air conditioner (Cooling-only or Heat pump), named for the Duct can be installed to Connect with air outlet and inlet. According to different ESP, it divides into Low ESP Duct type (12~30Pa), Medium ESP Duct type (50~80Pa) and high ESP Duct type (higher than 80P).

Application occasions:
Small super market, hotel, restaurant, office, meeting room and so on.

Features:
◇Conceal design, the unit is installed inside of ceiling, doesn't take room space, suitable for family and office place;
◇With Setting or Auto two operation modes, multi speed wind, makes you feel more comfortable;
◇There are red and white two teminals for motor wiring, users can adjust the ESP by changing the terminals to meet different requirements, simple and convenient; Low ESP Duct is 12/30Pa, and Medium ESP Duct is 50/80Pa, the default setting is 12/30Pa;
◇Special insulation design, achieces high heat insulation efficiency, and no condensation on shell; ◇ Low noise centrifugal fan, strong wind but quiet operation;
◇3-phase power supply type units with low ambient temperature cooling function, which makes the unit can run normally on the condition that the ambient temperature falls down to -15℃;
◇Auto restart;
◇Standard wired controller and optional remote controller;
◇Auxiliary electric heater for heat pump unit, with fast heating and low ambient temperature heating functions;
◇Failure automatic detection, if there is a failure, the indicator will flash and the failure code will display on the wired controller, the failure cause is easier to be found..

Function introduction

Type	Item	ALMD-C(H)**R1				
		18/4	24/4	36/5	48/5	60/5
Protection	High pressure protection	—	—	●	●	●
	Low pressure protection	—	—	●	●	●
	Compressor overload protection	●	●	●	●	●
	Exhaust high temperature protection	—	—	●	●	●
	Phase protection(Phase-loss, phase- reverse)	—	—	●	●	●
	Overheating protection	●	●	●	●	●
	Prevent frostbite protection	●	●	●	●	●
	Sensor failure alarm	●	●	●	●	●
	Malfunction code display function	●	●	●	●	●
Comfort	Cooling	●	●	●	●	●
	Heating	●	●	●	●	●
	Three speed	●	●	●	●	●
	Adjusted static pressure	—	—	—	—	—
	Auto- restart function(Optional)	●	●	●	●	●
	Anti-cold wind	●	●	●	●	●
	Afterheat wind blowing	●	●	●	●	●
	Timing on/off function	●	●	●	●	●
Operating	Clock display	●	●	●	●	●
	Running mode display	●	●	●	●	●
	Fan speed display	●	●	●	●	●
	Defrost display	●	●	●	●	●
	Timing on/off display	●	●	●	●	●
	Wind angle display	●	●	●	●	●
	Sleeping display	●	●	●	●	●
Running	Automatic running	●	●	●	●	●
	Dehumidify running	●	●	●	●	●
	Automatic defrost	●	●	●	●	●
	Ventilation function	●	●	●	●	●
	Low ambient cooling function	●	●	●	●	●
Health	Washable air filter	●	●	●	●	●
	Fresh air interface	●	●	●	●	●
Installation	Left /right drainage	—	—	—	—	—
	Left /right pipe connection	—	—	—	—	—
	Back/down air suction	—	—	—	—	—
	Guide board for collocating and installation	—	—	—	—	—

Remarks:●Stands for "YES" —Stands for "NO"

2. Specfication

Model	Indoor		ALMD-C18/4R1	ALMD-H18/4R1	ALMD-C24/4R1
	Outdoor		AL-C18/4R1(U)	AL-H18/4R1(U)	AL-C24/4R1(U)
Factory Model	Indoor		ALHi-18A4/R1-S3	ALHi-H18A4/R1-S3	ALHi-24B4/R1-S3
	Outdoor		AL-18A4/R1(T)	AL-H18A4/R1(T)	AL-24B4/R1(T)
Power Supply		V~,Hz,Ph	220~240,50,1	220~240,50,1	220~240,50,1
Capacity	Cooling	Btu/h	18000	18000	24000
		kW	5.3	5.3	7.2
	Heating	Btu/h	/	20000	/
		kW	/	5.8	/
Electric Data	Rated Cooling Power Input	kW	1.73	1.73	2.24
	Rated Heating Power Input	kW	/	1.70	/
	Rated Cooling Current	A	7.92	7.92	10.25
	Rated Heating Current	A	/	7.78	/
Performance	EER	W/W	3.06	3.06	3.21
	COP	W/W	/	3.41	/
Indoor Fan Fotor	Model		YSK100-4	YSK100-4	YSK160-4
	Brand		KANGBAO	KANGBAO	KANGBAO
	Output Power x Fan quantity	W	100*1	100*1	160
	Capacitor	uF	3	3	2.5
	Speed (Hi/Mi/Lo)	r/min	960/860/840	960/860/840	1050/1000/910
Indoor Coil	Number Of Row		2	2	3
	Tube Pitch(a)x Row Pitch(b)	mm	20.5×12.7	20.5×12.7	20.5×12.7
	Fin Spacing	mm	1.5	1.5	1.6
	Fin Material		Hydrophilic aluminum fin		
	Tube Outside Dia.and Material	mm	φ7,Inner grooved	φ7,Inner grooved	φ7,Inner grooved
	Coil Length x Height x Width	mm	625×369×25.4	625×369×25.4	625×369×38.1
	Heat Exchanging Area	m^2	6.96	6.96	9.84
Indoor Unit	Indoor Air Flow (Hi/Mi/Lo)	m^3/h	1000/800/700	1000/800/700	1400/1120/980
	Noise Level(Hi/Mi/Lo)	dB(A)	44/41/35	44/41/35	47/44/38
	External Static Pressure	Pa	50/80	50/80	50/80
	Net Dimension (W*H*D)	mm	890×785×290	890×785×290	890×785×290
	Packing Dimension (W*H*D)	mm	1100×870×360	1100×870×360	1100×870×360
	Net Weight	Kg	34	34	36
	Gross Weight	Kg	40	40	42
Refrigerant Pipe	Liquid Side	mm	6.35	6.35	9.52
	Gas Side	mm	12.7	12.7	15.88
	Max. Refrigerant Pipe Length	m	20	20	30

	Max. Difference In Level	m	15	15	15
Operation Temperature Range		℃	16~32	16~32	16~32
Ambient Temperature Range(Cooling/Heating)		℃	-5~49	-5~49/-15~24	-5~49
Application Area		m^2	21-35	21-35	28-47
Connection Wiring	Power Wiring(Indoor)	mm^2	3×2.5mm^2	3×2.5mm^2	/
	Power Wiring(Outdoor)	mm^2	/	/	3×4mm^2
	Signal Wiring	mm^2	3×2.5mm^2+1mm 2	3×2.5mm^2+2×1mm 2	3×1mm^2+2×1mm 2
Wireless Remote Controller			G-XK-HCE3	G-XK-HCE3	G-XK-HCE3
Qty'per 20'& 40'&40HQ(Only For Reference)		Set	39/81/100	39/81/100	32/74/92

Note:

1. Working condition of the cooling capacity measured: Inside the room DB temperature 27℃,WB temperature19℃;Outside of the room DB temperature 35℃,WB temperature 24℃;Working condition of the heating capacity measured:Inside the room DB temperature 20℃,Outside of the room DB temperature 7℃,WB temperature 6℃。
2. Parameters above are all measured when the connecting pipe is 5 meters.
3. Parameters above may be modified as product improvement. We keep the right to change the product specifications without prior notice, please take the parameters listed on the nameplate as criterion.

Model	Indoor		ALMD-H24/4R1	ALMD-C36/5R1	ALMD-H36/5R1
	Outdoor		AL-H24/4R1(U)	AL-C36/5R1(U)	AL-H36/5R1(U)
Factory Model	Indoor		ALHi-H24B4/R1-S 3	ALHi-36A5/R1-S 3	ALHi-H36A5/R1-S 3
	Outdoor		AL-H24B4/R1(T)	AL-36A5/R1(T)	AL-H36A5/R1(T)
Power Supply		V~,Hz,P h	220~240,50,1	380~415,50,3	380~415,50,3
Capacity	Cooling	Btu/h	24000	36000	36000
		kW	7.2	10.6	10.6
	Heating	Btu/h	27500	/	40000
		kW	8.1	/	11.7
Electric Data	Rated Cooling Power Input	kW	2.24	3.73	3.73
	Rated Heating Power Input	kW	2.35	/	3.50
	Rated Cooling Current	A	10.25	7.14	7.14
	Rated Heating Current	A	10.76	/	6.79
Performance	EER	W/W	3.21	2.84	2.84
	COP	W/W	3.45	/	3.34
Indoor Fan Fotor	Model		YSK160-4	YSK180-4	YSK180-4
	Brand		KANGBAO	KANGBAO	KANGBAO
	Output Power x Fan quantity	W	160	180*1	180*1
	Capacitor	uF	2.5	6	6
	Speed (Hi/Mi/Lo)	r/min	1050/1000/910	1200/1120/1060	1200/1120/1060
Indoor Coil	Number Of Row		3	3	3
	Tube Pitch(a)x Row Pitch(b)	mm	20.5×12.7	20.5×12.7	20.5×12.7

	Fin Spacing	mm	1.6	1.5	1.5
	Fin Material		Hydrophilic aluminum fin		
	Tube Outside Dia.and Material	mm	φ7,Inner grooved	φ7,Inner grooved	φ7,Inner grooved
	Coil Length x Height x Width	mm	625×369×38.1	625×369×38.1	625×369×38.1
	Heat Exchanging Area	m^2	9.84	10.44	10.44
Indoor Unit	Indoor Air Flow (Hi/Mi/Lo)	m^3/h	1400/1120/980	2000/1600/1400	2000/1600/1400
	Noise Level(Hi/Mi/Lo)	dB(A)	47/44/38	50/47/41	50/47/41
	External Static Pressure	Pa	50/80	50/80	50/80
	Net Dimension (W*H*D)	mm	890×785×290	890×785×290	890×785×290
	Packing Dimension (W*H*D)	mm	1100×870×360	1100×870×360	1100×870×360
	Net Weight	Kg	36	36	36
	Gross Weight	Kg	42	42	42
Refrigerant Pipe	Liquid Side	mm	9.52	9.52	9.52
	Gas Side	mm	15.88	15.88	15.88
	Max. Refrigerant Pipe Length	m	30	50	50
	Max. Difference In Level	m	15	30	30
Operation Temperature Range		℃	16~32	16~32	16~32
Ambient Temperature Range(Cooling/Heating)		℃	-5~49/-15~24	-5~49	-5~49/-15~24
Application Area		m^2	28-47	42-70	42-70
Connection Wiring	Power Wiring(Indoor)	mm^2	/	$3×1mm^2$	$3×1mm^2$
	Power Wiring(Outdoor)	mm^2	$3×4mm^2$	$5×2.5mm^2$	$5×2.5mm^2$
	Signal Wiring	mm^2	$3×1mm^2+3×1mm^2$	$2×1mm^2$	$2×1mm^2$
Wireless Remote Controller			G-XK-HCE3	G-XK-HCE3	G-XK-HCE3
Qty'per 20'& 40'&40HQ(Only For Reference)		Set	32/74/92	30/65/79	30/65/79

Note:

1. Working condition of the cooling capacity measured: Inside the room DB temperature 27℃,WB temperature19℃;Outside of the room DB temperature 35℃,WB temperature 24℃;Working condition of the heating capacity measured:Inside the room DB temperature 20℃,Outside of the room DB temperature 7℃,WB temperature 6℃。
2. Parameters above are all measured when the connecting pipe is 5 meters.
3. Parameters above may be modified as product improvement. We keep the right to change the product specifications without prior notice, please take the parameters listed on the nameplate as criterion.

Model	Indoor		ALMD-C48/5R1	ALMD-H48/5R1
	Outdoor		AL-C48/5R1(U)	AL-H48/5R1(U)
Factory Model	Indoor		ALHi-48A5/R1-S3	ALHi-H48A5/R1-S3
	Outdoor		AL-48A5/R1(T)	AL-H48A5/R1(T)
Power Supply		V~,Hz,Ph	380~415,50,3	380~415,50,3
Capacity	Cooling	Btu/h	48000	48000
		kW	14.0	14.0
	Heating	Btu/h	/	53000

		kW	/	15.5
Electric Data	Rated Cooling Power Input	kW	4.87	4.87
	Rated Heating Power Input	kW	/	5.13
	Rated Cooling Current	A	9.32	9.32
	Rated Heating Current	A	/	9.82
Performance	EER	W/W	2.87	2.87
	COP	W/W	/	3.02
Indoor Fan Fotor	Model		YSK180-4	YSK180-4
	Brand		KANGBAO	KANGBAO
	Output Power x Fan quantity	W	180*1	180*1
	Capacitor	uF	6	6
	Speed (Hi/Mi/Lo)	r/min	1200/1120/1060	1200/1120/1060
Indoor Coil	Number Of Row		3	3
	Tube Pitch(a)x Row Pitch(b)	mm	25.4×22	25.4×22
	Fin Spacing	mm	1.6	1.6
	Fin Material		Hydrophilic aluminum fin	
	Tube Outside Dia.and Material	mm	φ7,Inner grooved	φ7,Inner grooved
	Coil Length x Height x Width	mm	985×369×38.1	985×369×38.1
	Heat Exchanging Area	m^2	15.56	15.56
Indoor Unit	Indoor Air Flow (Hi/Mi/Lo)	m^3/h	2000/1600/1400	2000/1600/1400
	Noise Level(Hi/Mi/Lo)	dB(A)	53/50/44	53/50/44
	External Static Pressure	Pa	50/80	50/80
	Net Dimension (W*H*D)	mm	1250×785×290	1250×785×290
	Packing Dimension (W*H*D)	mm	1460×870×360	1460×870×360
	Net Weight	Kg	52	52
	Gross Weight	Kg	59	59
Refrigerant Pipe	Liquid Side	mm	9.52	9.52
	Gas Side	mm	19.05	19.05
	Max. Refrigerant Pipe Length	m	50	50
	Max. Difference In Level	m	30	30
Operation Temperature Range		℃	16~32	16~32
Ambient Temperature Range(Cooling/Heating)		℃	-5~49	-5~49/-15~24
Application Area		m^2	56-93	56-93
Connection Wiring	Power Wiring(Indoor)	mm^2	3×1mm^2	3×1mm^2
	Power Wiring(Outdoor)	mm^2	5×2.5mm^2	5×2.5mm^2
	Signal Wiring	mm^2	2×1mm^2	2×1mm^2
Wireless Remote Controller			G-XK-HCE3	G-XK-HCE3
Qty'per 20'& 40'&40HQ(Only For Reference)		Set	20/42/42	20/42/42

Note:

1. Working condition of the cooling capacity measured: Inside the room DB temperature 27℃,WB temperature19℃;Outside of the room DB temperature 35℃,WB temperature 24℃;Working condition of the heating capacity measured:Inside the room DB temperature 20℃,Outside of the room DB temperature 7℃,WB temperature 6℃。

2. Parameters above are all measured when the connecting pipe is 5 meters.
3. Parameters above may be modified as product improvement. We keep the right to change the product specifications without prior notice, please take the parameters listed on the nameplate as criterion.

Model	Indoor		ALMD-C60/5R1	ALMD-H60/5R1
	Outdoor		AL-C60/5R1(U)	AL-H60/5R1(U)
Factory Model	Indoor		ALHi-60A5/R1-S3	ALHi-H60A5/R1-S3
	Outdoor		AL-60A5/R1(T)	AL-H60A5/R1(T)
Power Supply		V~,Hz,Ph	380~415,50,3	380~415,50,3
Capacity	Cooling	Btu/h	60000	60000
		kW	17.6	17.6
	Heating	Btu/h	/	63500
		kW	/	18.5
Electric Data	Rated Cooling Power Input	kW	5.71	5.71
	Rated Heating Power Input	kW	/	6.00
	Rated Cooling Current	A	10.92	10.92
	Rated Heating Current	A	/	11.48
Performance	EER	W/W	3.08	3.08
	COP	W/W	/	3.08
Indoor Fan Fotor	Model		YSK180-4	YSK180-4
	Brand		KANGBAO	KANGBAO
	Output Power x Fan quantity	W	180*1	180*1
	Capacitor	uF	6	6
	Speed (Hi/Mi/Lo)	r/min	1200/1120/1060	1200/1120/1060
Indoor Coil	Number Of Row		3	3
	Tube Pitch(a)x Row Pitch(b)	mm	25.4×22	25.4×22
	Fin Spacing	mm	1.6	1.6
	Fin Material		Hydrophilic aluminum fin	
	Tube Outside Dia.and Material	mm	φ7,Inner grooved	φ7,Inner grooved
	Coil Length x Height x Width	mm	985×369×38.1	985×369×38.1
	Heat Exchanging Area	m^2	15.56	15.56
Indoor Unit	Indoor Air Flow (Hi/Mi/Lo)	m^3/h	2800/2240/1960	2800/2240/1960
	Noise Level(Hi/Mi/Lo)	dB(A)	53/50/44	53/50/44
	External Static Pressure	Pa	50/80	50/80
	Net Dimension (W*H*D)	mm	1250×785×290	1250×785×290
	Packing Dimension (W*H*D)	mm	1460×870×360	1460×870×360
	Net Weight	Kg	52	52
	Gross Weight	Kg	59	59
Refrigerant Pipe	Liquid Side	mm	9.52	9.52
	Gas Side	mm	19.05	19.05
	Max. Refrigerant Pipe Length	m	50	50
	Max. Difference In Level	m	30	30
Operation Temperature Range		℃	16~32	16~32

Ambient Temperature Range(Cooling/Heating)		℃	-5~49	-5~49/-15~24
Application Area		m^2	64-107	64-107
Connection Wiring	Power Wiring(Indoor)	mm^2	3×1mm^2	3×1mm^2
	Power Wiring(Outdoor)	mm^2	5×2.5mm^2	5×2.5mm^2
	Signal Wiring	mm^2	2×1mm^2	2×1mm^2
Wireless Remote Controller			G-XK-HCE3	G-XK-HCE3
Qty'per 20'& 40'&40HQ(Only For Reference)		Set	20/42/42	20/42/42

Note:

1. Working condition of the cooling capacity measured: Inside the room DB temperature 27℃,WB temperature19℃;Outside of the room DB temperature 35℃,WB temperature 24℃;Working condition of the heating capacity measured:Inside the room DB temperature 20℃,Outside of the room DB temperature 7℃,WB temperature 6℃。
2. Parameters above are all measured when the connecting pipe is 5 meters.
3. Parameters above may be modified as product improvement. We keep the right to change the product specifications without prior notice, please take the parameters listed on the nameplate as criterion.

3 Capacity amendment

3.1 Running range

Cooling capacity (Btu/h)		18000	24000	36000	48000	60000
Power supply		220-240V~/50Hz		380-415V 3N~/50Hz		
Voltage		187~242V		320~420V		
Ambient temperature	Cooling	-5~49℃				
	Heating	-15~24℃				

3.2 Amendment coefficient of cooling capacity under different indoor/outdoor DB and WB temperature

Indoor air inlet temperature℃		Outdoor air inlet DB temperature℃				
DB	**WB**	**25**	**30**	**35**	**40**	**43**
23	16	0.98	0.94	0.89	0.85	0.82
25	18	1.05	1	0.95	0.90	0.87
27	19	1.1	1.05	1	0.95	0.91
28	20	1.12	1.07	1.02	0.96	0.93
30	22	1.19	1.13	1.08	1.02	0.99
32	24	1.26	1.20	1.15	1.08	1.05

Actual cooling capacity calculation:

Actual cooling capacity=amendment coefficient of cooling capacity × nominal cooling capacity

——nominal cooling capacity could be found from the performance parameters list

——amendment coefficient of cooling capacity could be found from table above.

3.3 Amendment coefficient of heating capacity under different indoor/outdoor DB and WB temperature

Indoor air inlet DB temperature ℃	Outdoor air inlet WB temperature ℃				
	-5	0	6	10	15
16	0.65	0.80	1.02	1.13	-
18	0.61	0.76	1.02	1.12	-
20	0.6	0.75	1	1.11	1.25
21	0.59	0.72	0.99	1.1	1.24
22	0.58	0.71	0.97	1.09	1.23
24	0.56	0.7	0.96	1.08	1.22

Actual heating capacity calculation:

Actual heating capacity=amendment coefficient of heating capacity × nominal heating capacity

——nominal heating capacity could be found from the performance parameters list

——amendment coefficient of heating capacity could be found from table above.

3.4 Amendment coefficients of heating and cooling capacity under different height drop

Different Cooling Capacity modified coefficients at different height:

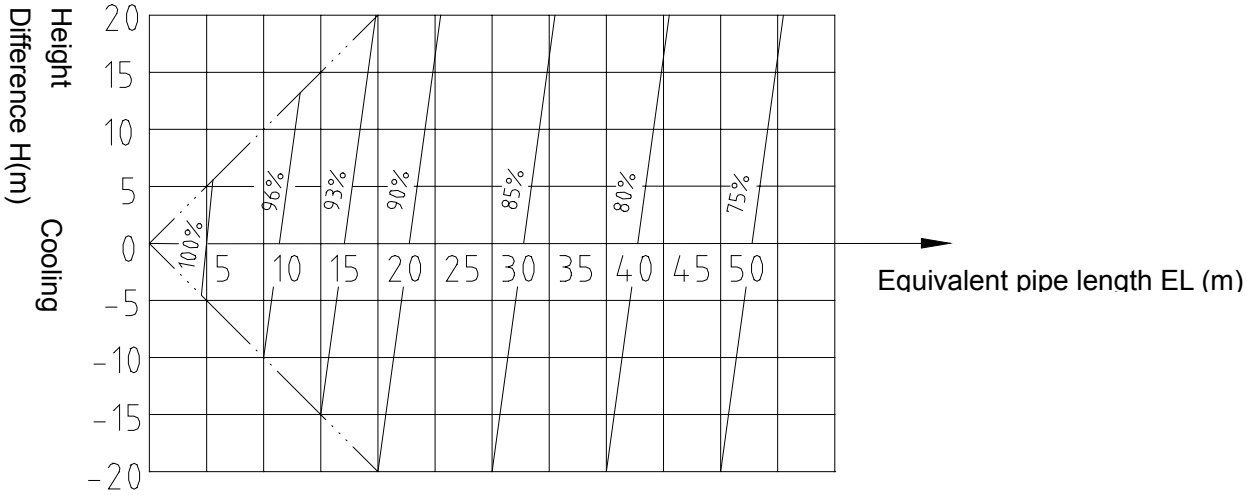

Note: H = Height of Outdoor Unit － Height of Indoor Unit

3.5 Different Heating Capacity modified coefficients at different height:

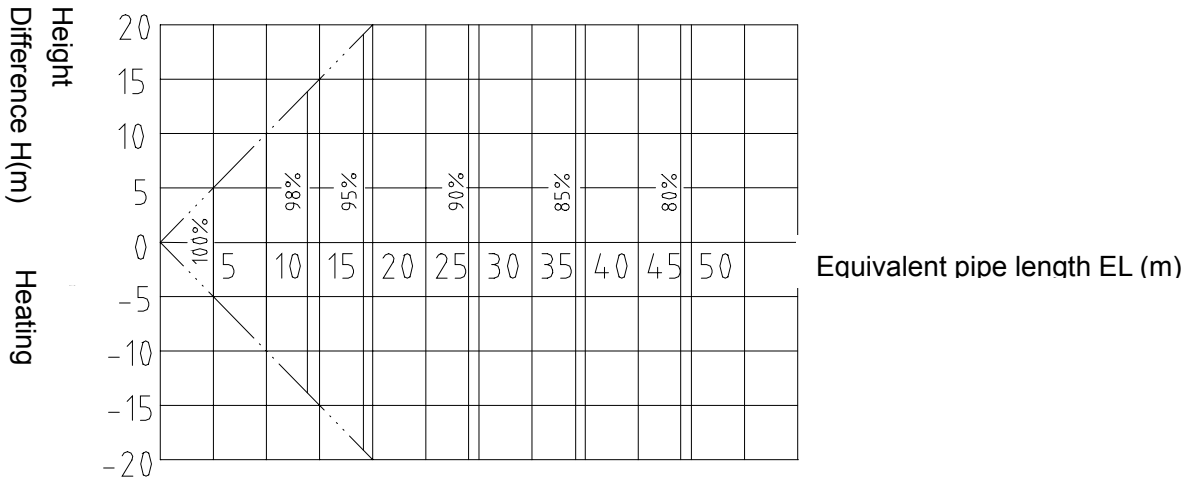

Note: H = Height of Outdoor Unit － Height of Indoor Unit

4. Dimension

ALMD-C(H)18/4R1, ALMD-C(H)24/4R1
ALMD-C(H)36/5R1

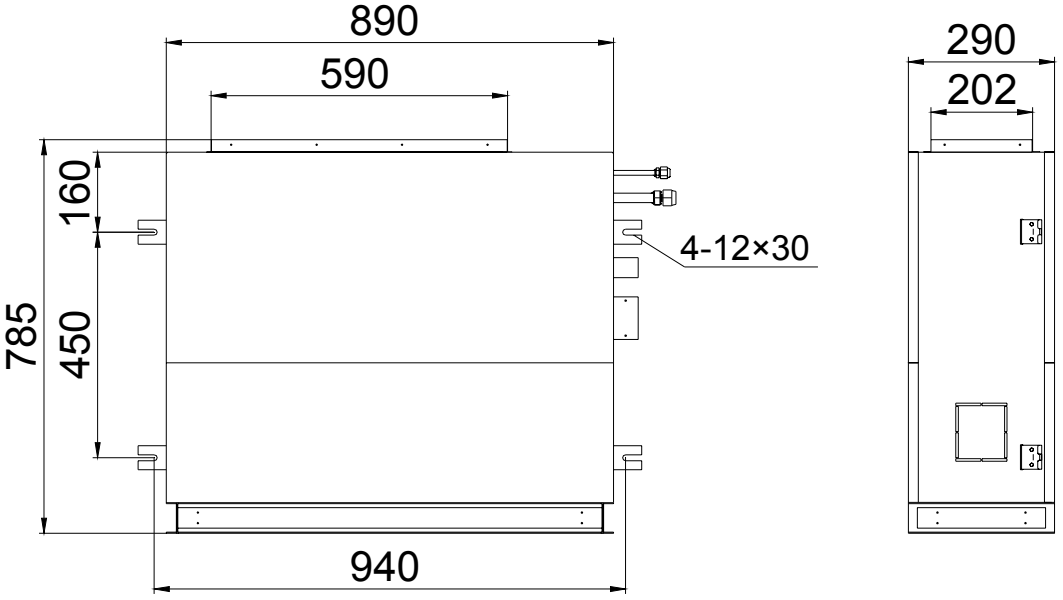

ALMD-C(H)48/5R1, ALMD-C (H)60/5R1

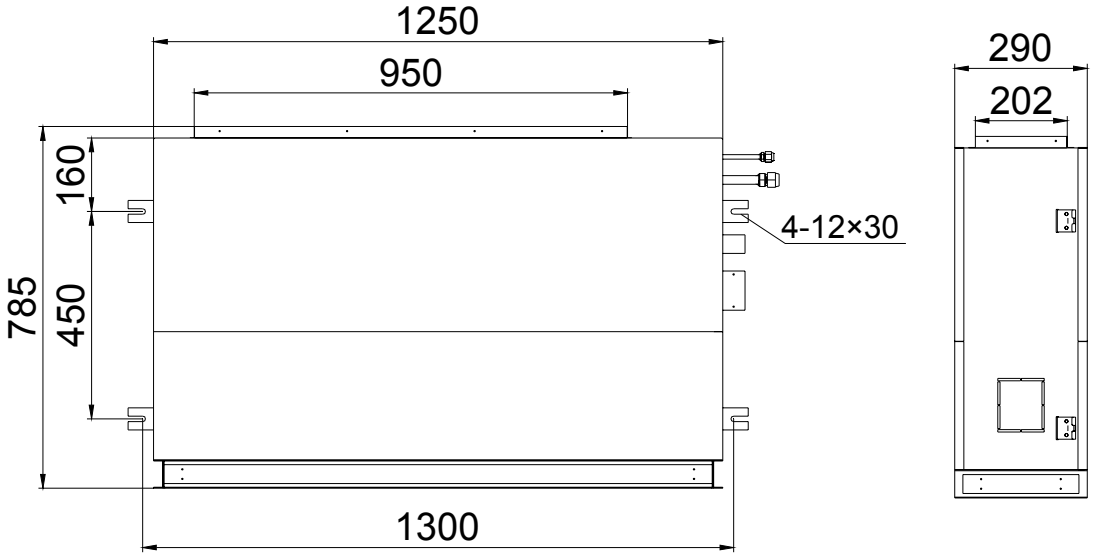

5. Electrical wiring and connection

ALMD-H18/4R1,

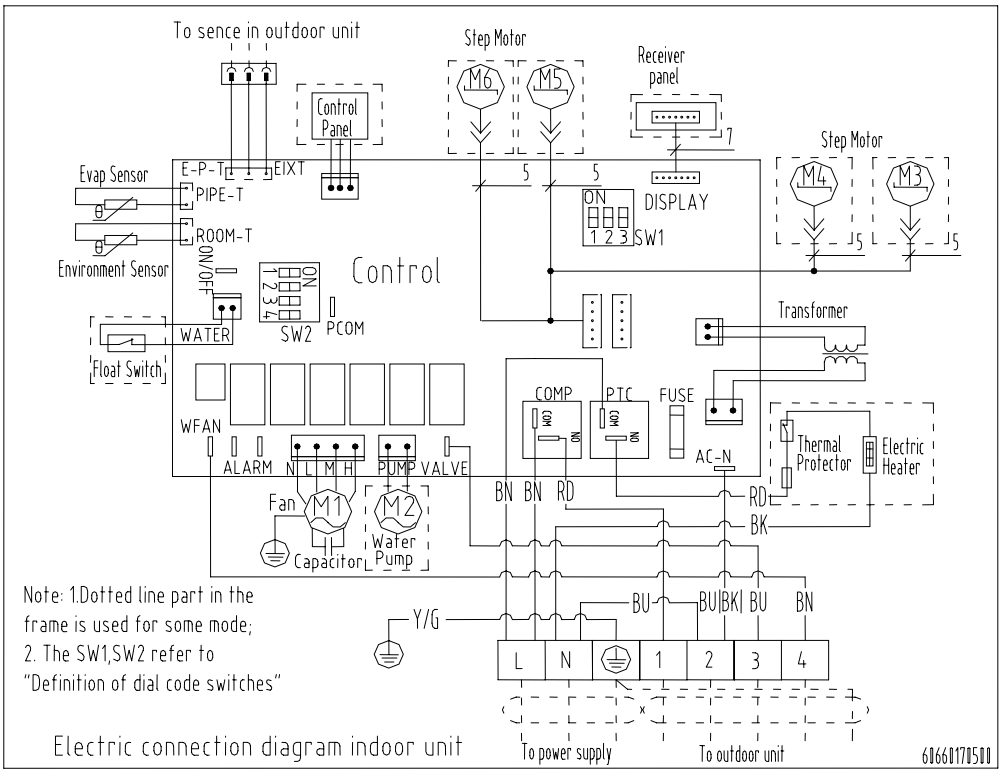

ALMD-C18/4R1

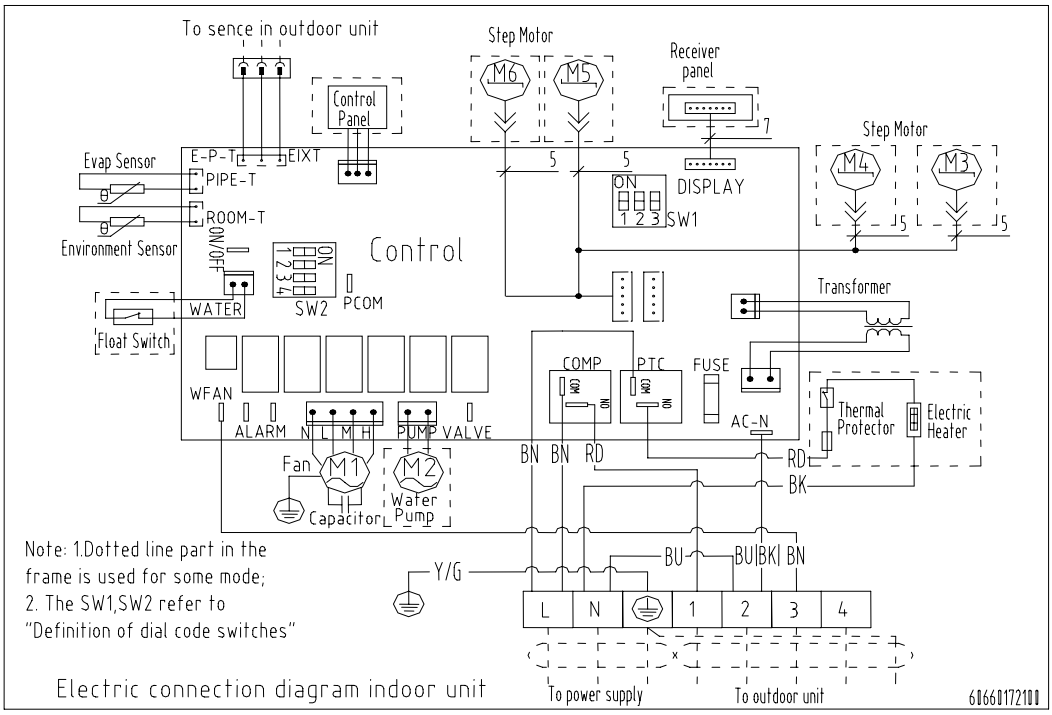

ALMD-H24/4R1

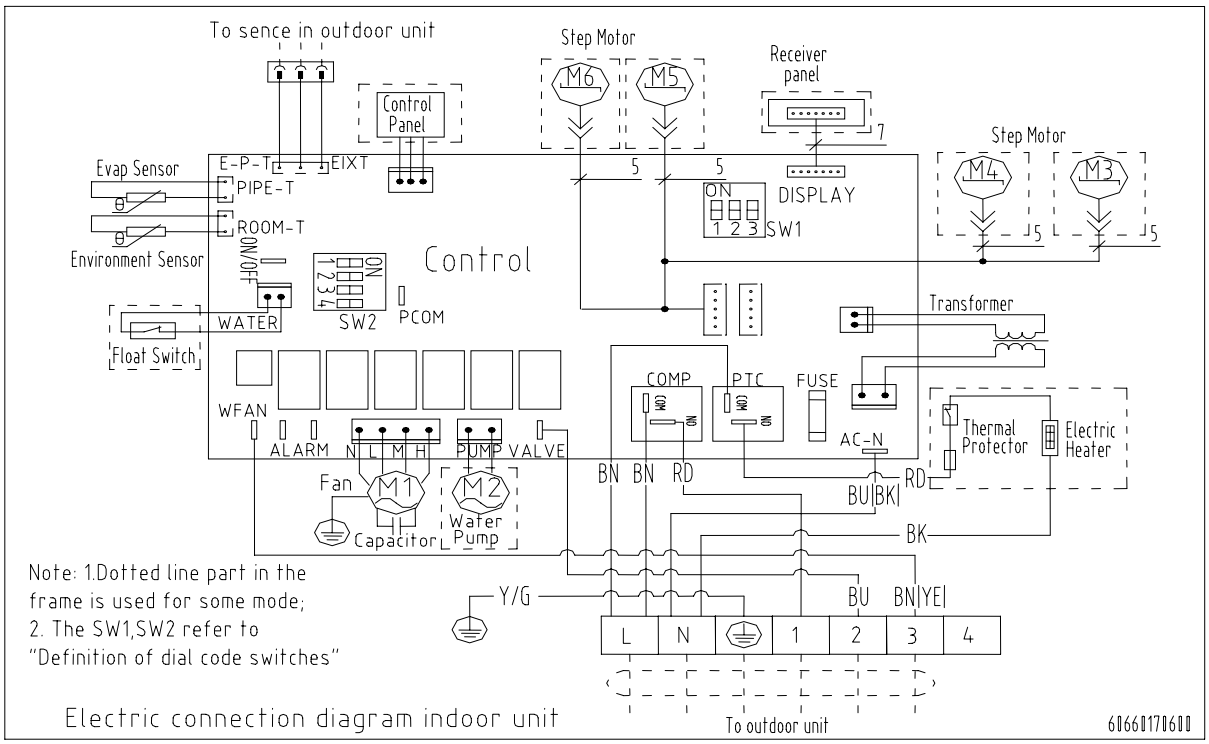

ALMD-C24/4R1

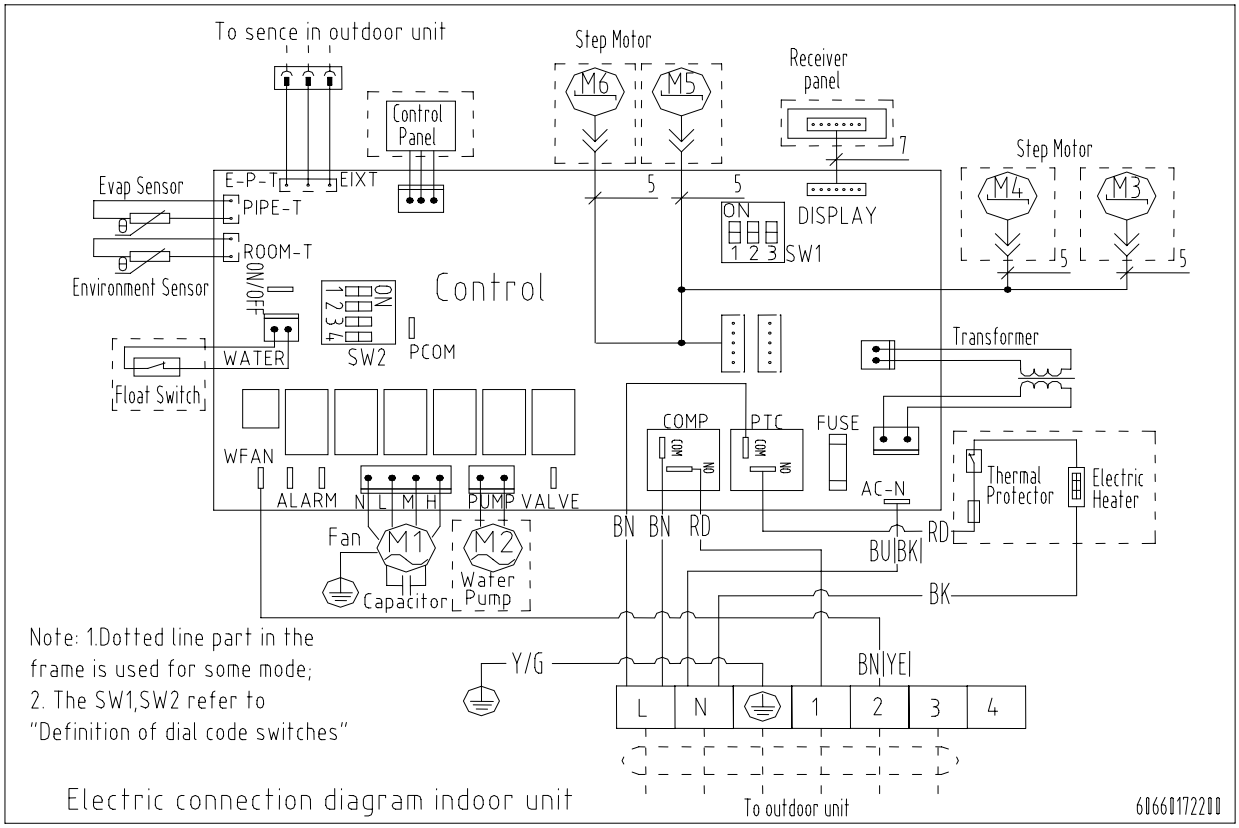

ALMD-C(H)36/5R1, ALMD-C(H)48/5R1, ALMD-C(H)60/5R1

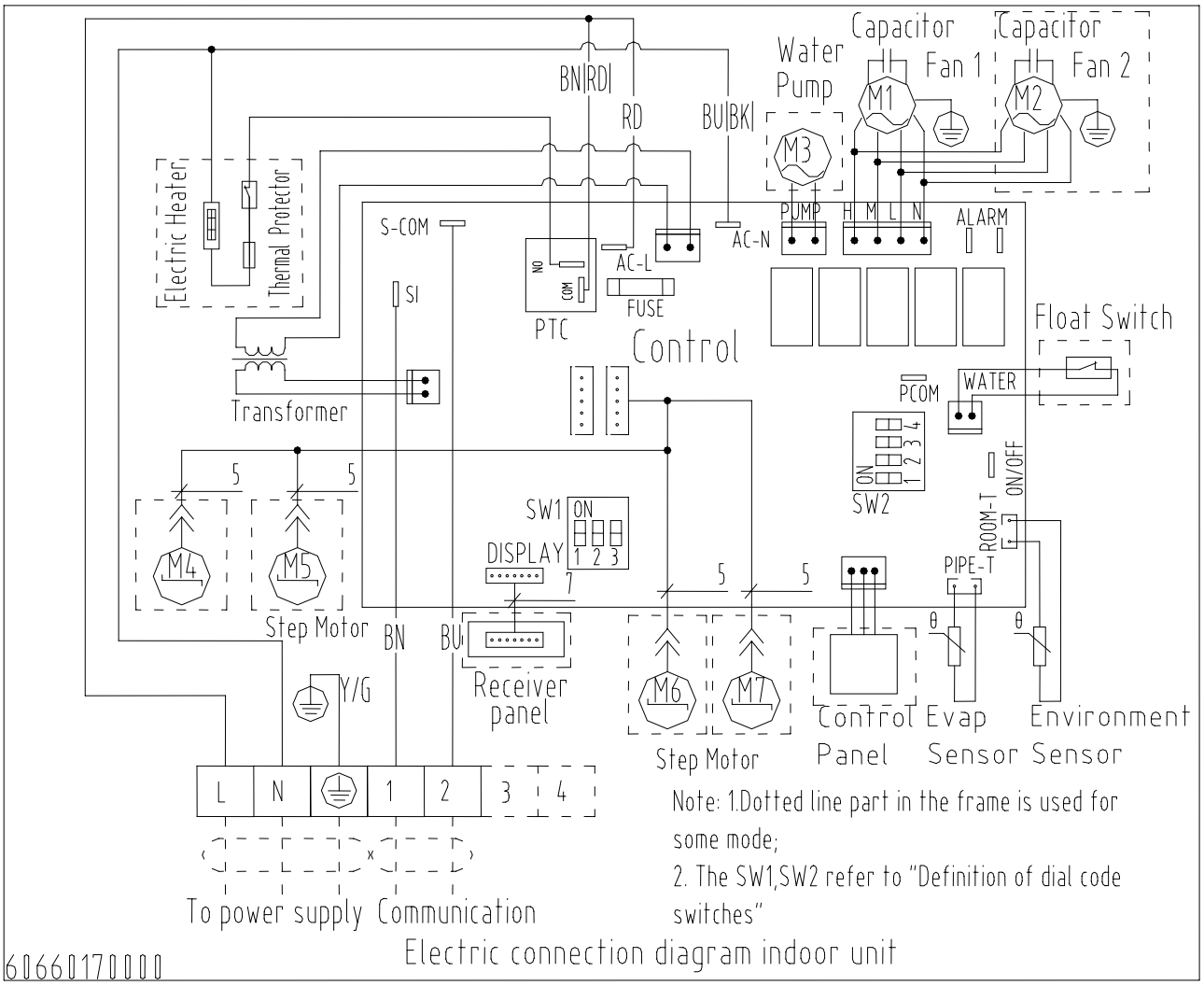

ALCA-H18/4R1

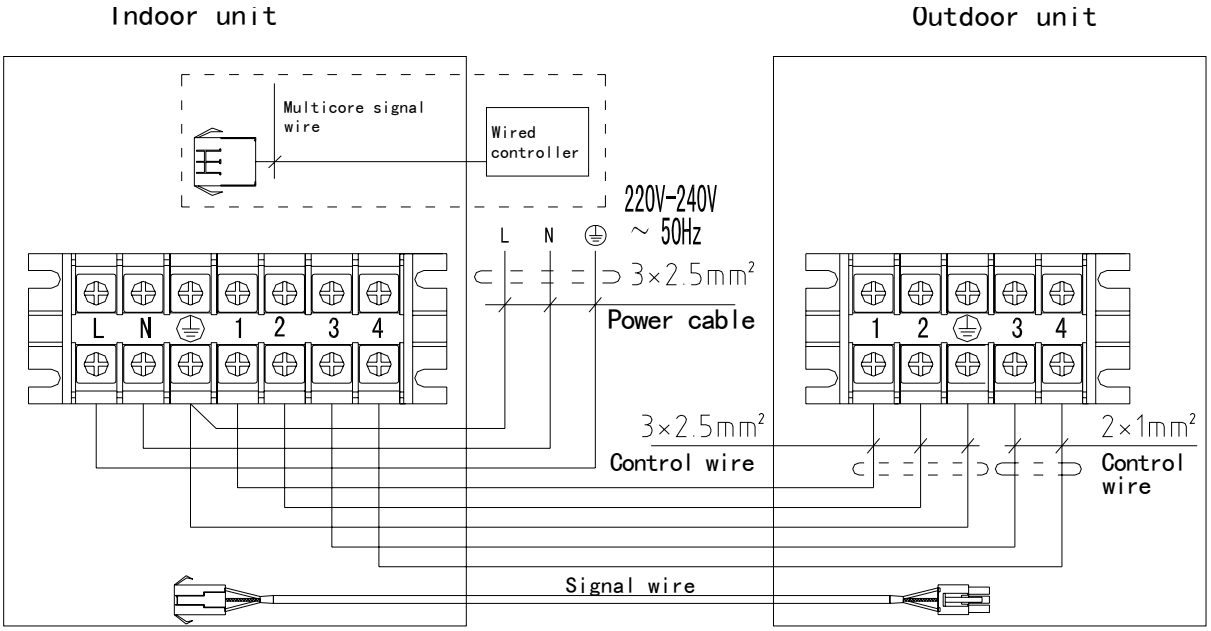

ALCA-C18/4R1

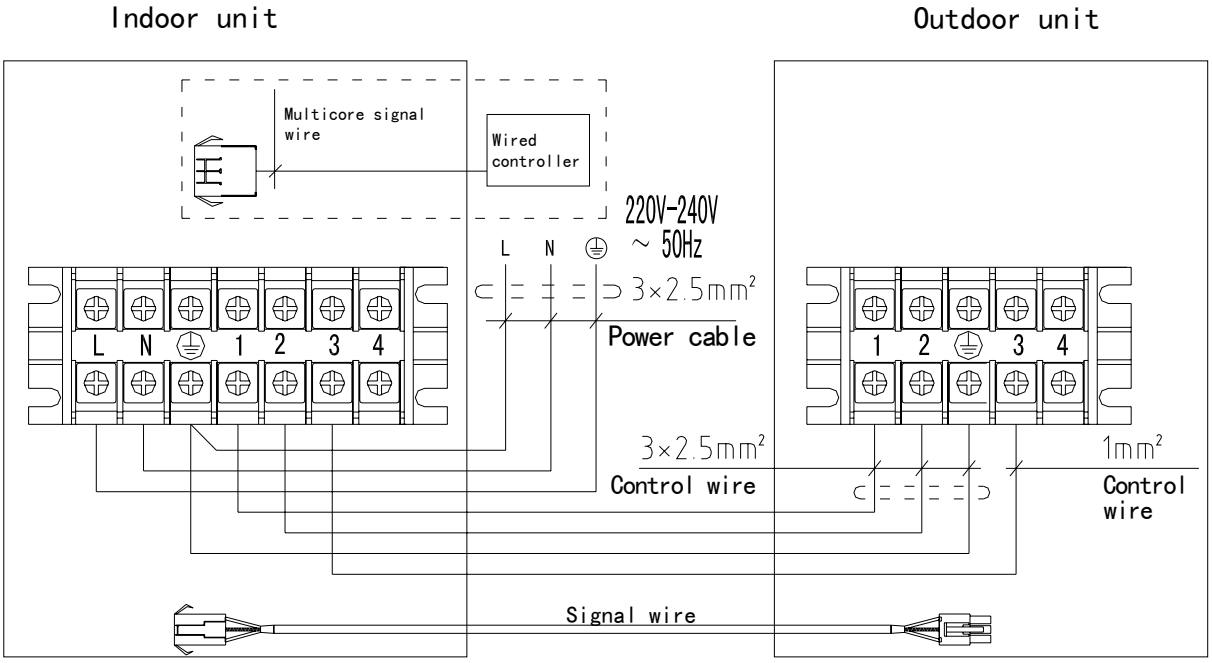

ALCA-H24/4R1

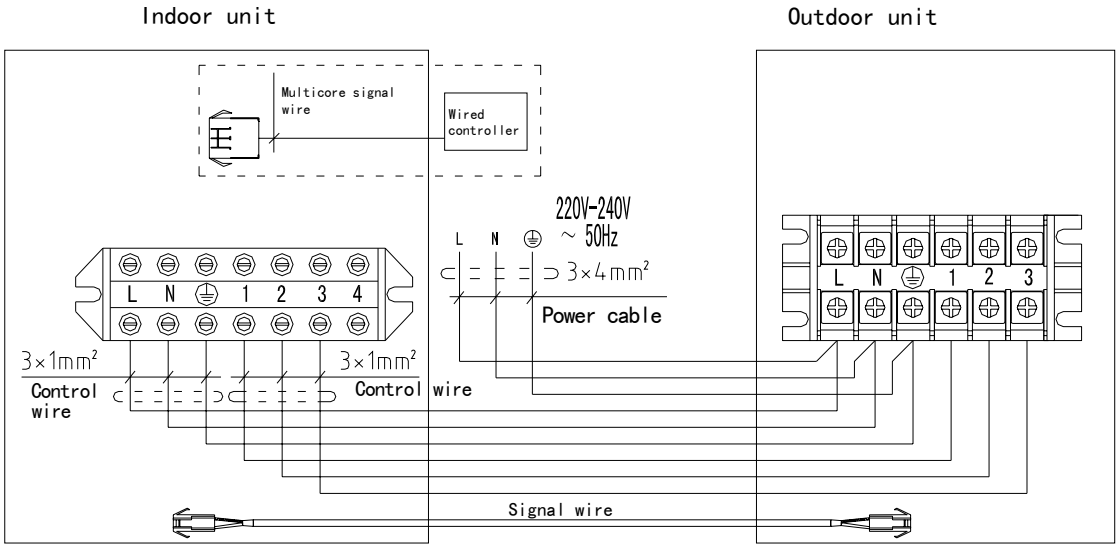

ALCA-C24/4R1

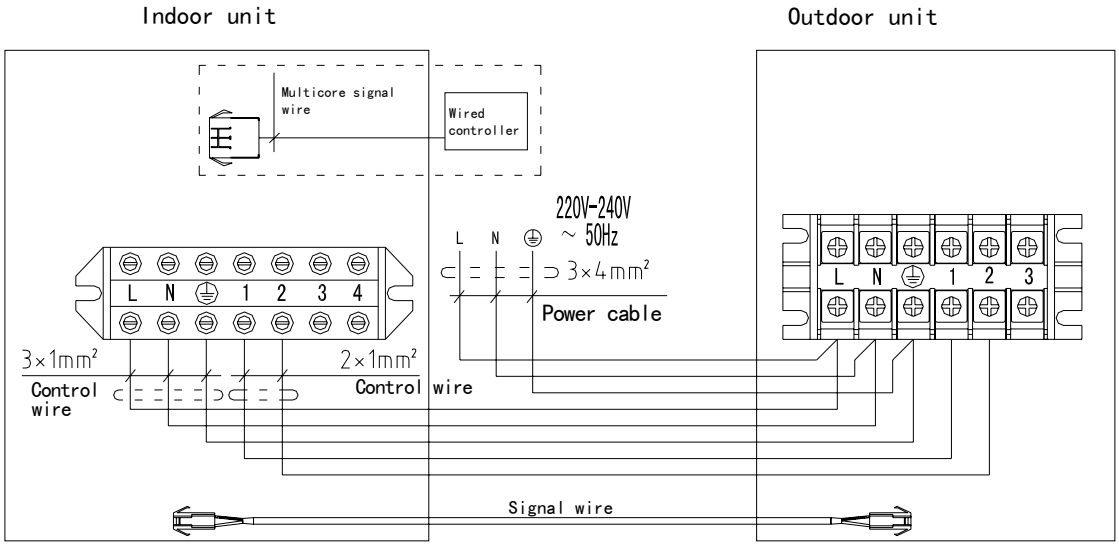

ALCA-C(H)36/5R1, ALCA-C(H)48/5R1, ALCA-C(H)60/5R1

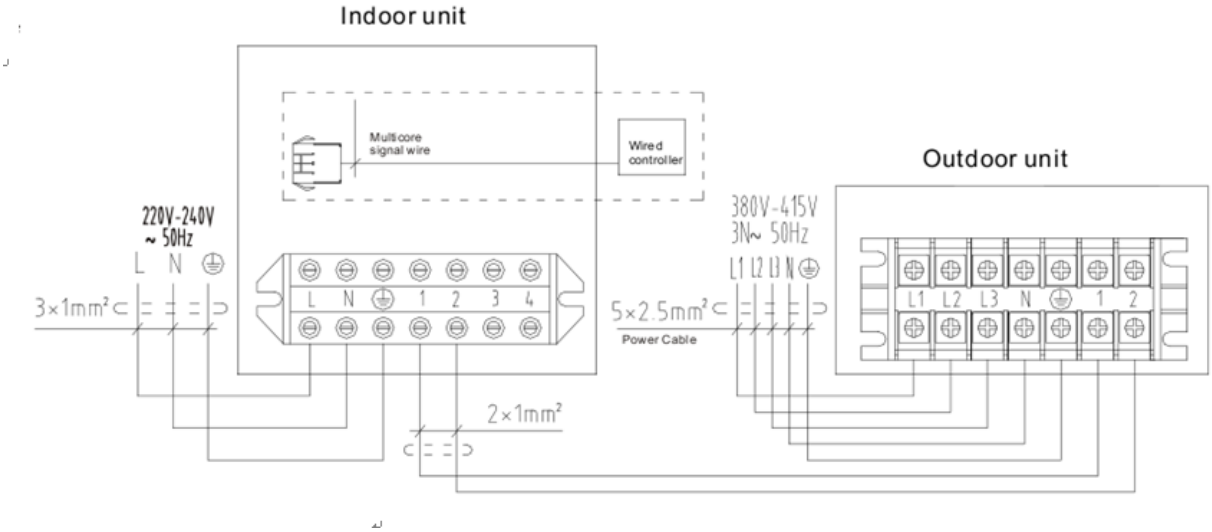

Introduction of Control Board sockets QRDL-3F(2S)-SYE1 (indoor unit) (match with the outdoor unit which the Power supply is 220V-240V, 1PH)

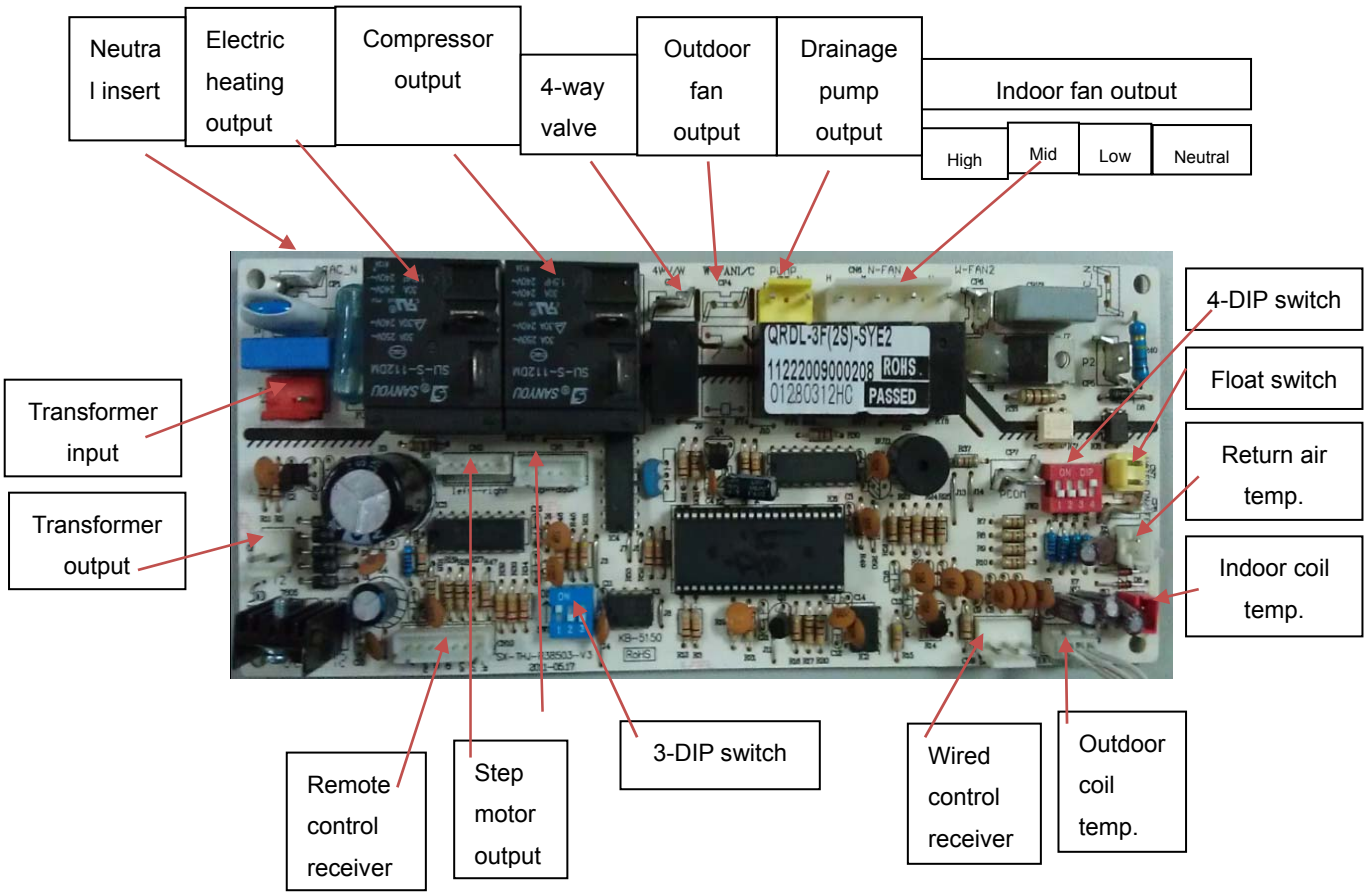

Introduction of control board QRD-SN3F(2S)-SYE1 sockets (Indoor unit) (match with the outdoor unit which the Power supply is 380V-415V, 3PH)

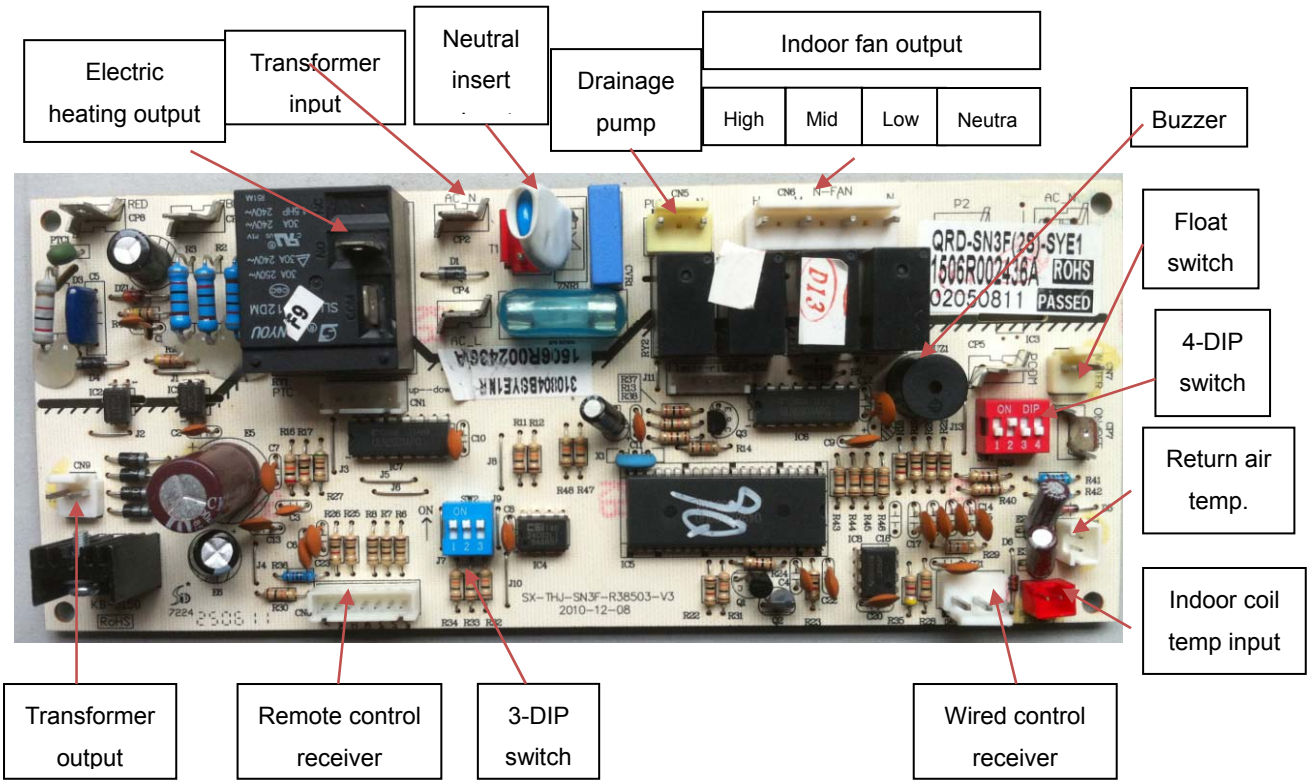

6 Fan performance

ALMD-H18/4R1

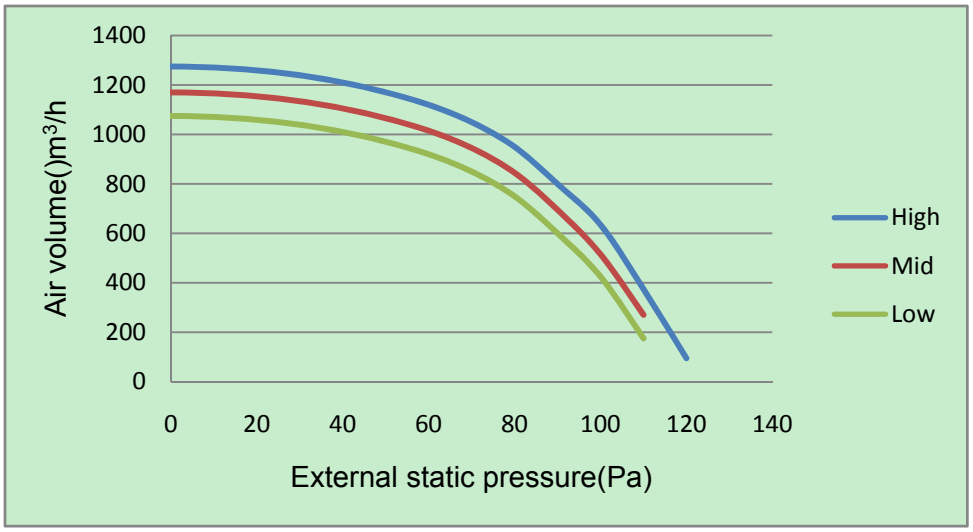

ALMD-H24/4R1

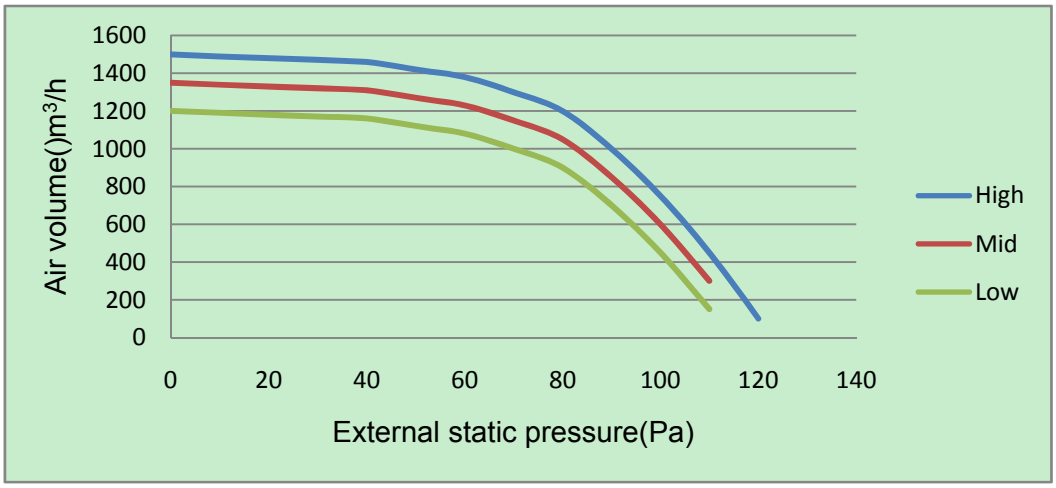

ALMD-H36/5R1

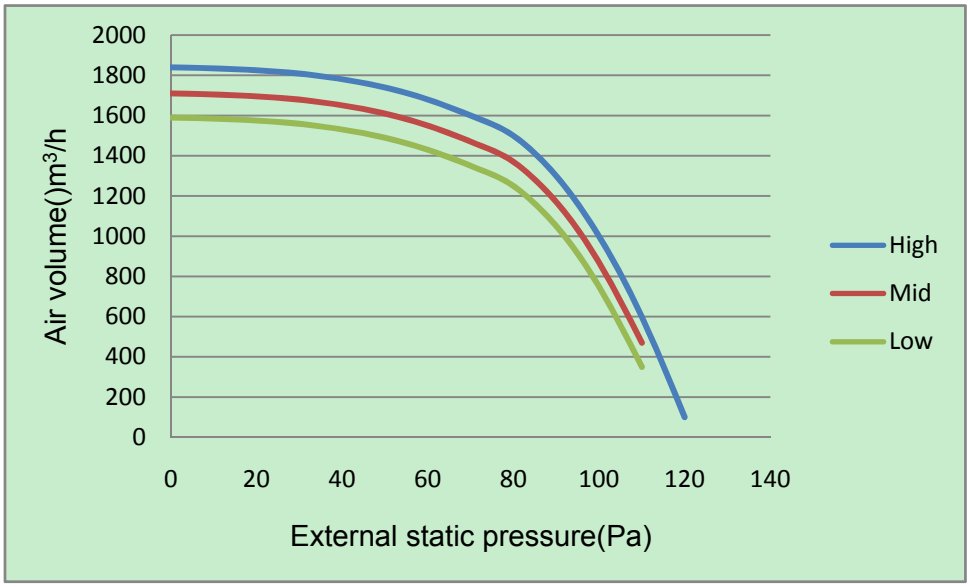

ALMD-H48/5R1, ALMD-H60/5R1

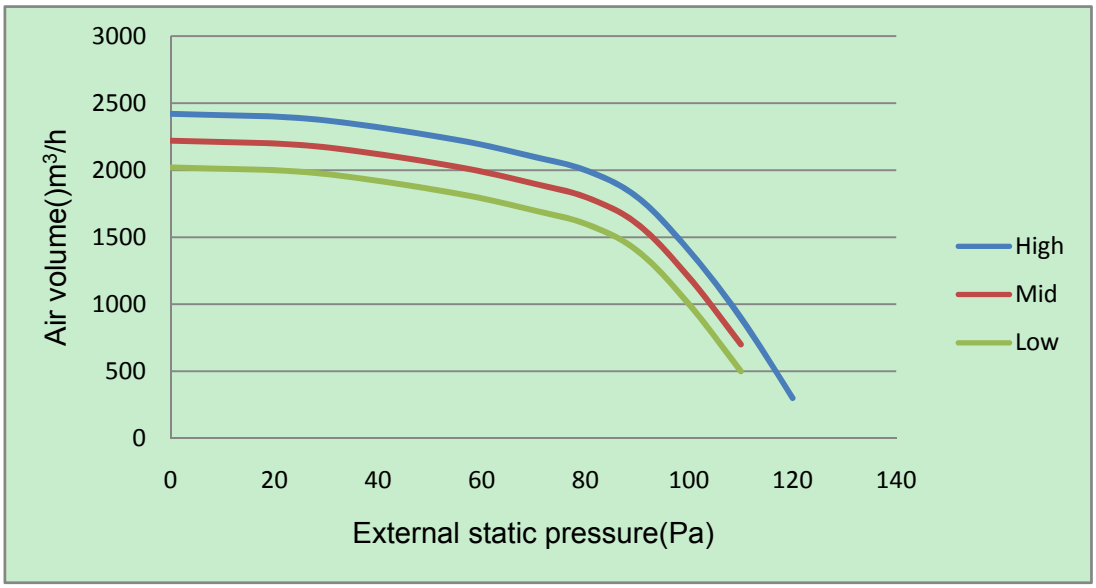

7. Installation

7.1 Preparation and equipments before installation

Please buy following spare parts from your local market before installation	Besides general implements, other implements are needed when connecting the pipe
Hung bolts M12, 4 pcs	Acetylene cylinders, oxygen cylinders (when longer pipe used it should be welded)
Drainage pipe PVC	One set pipe cut machine. (cut copper pipe)
Copper connecting pipe	Refrigerant cans, electronic balance (when longer pipe used additional gas should be charged)
Adhesive belt (big size) 5 pcs, (small size) 5 pcs	Pressure gauges, pipe clamp, welding torch, 2B silver electrode
Heat insulation material used to connect copper pipe (PE foam material, its thickness is more than 8mm)	Wrench 2 pcs, one of them is with adjustable torque wrench (42N.m,65N.m,100N.mm)
Power cable, electrical wire between indoor and outdoor unit(Must be in accordance with the wire diameter in the wiring diagram)	Nitrogen cylinder (in order to prevent oxidation when welding, using Nitrogen to replace the air)

7.2 Indoor unit installation precaution

◇Hanging location should be able to support the unit's weight, there should be no increase in noise and vibration. If the hanging location needs reinforcement, it should be reinforced before installation;

◇Choose the space above the ceiling that can put the indoor unit inside;

◇The location should be easy for drainage;

◇The unit should not be installed in the heat source, steam source oil mist places (such as machine room, kitchen, laundry room, mechanical workshop, etc.) in order to avoid performance degradation, electric shock, plastic parts corrosion which lead to unit broken;

◇Choose the location at least 1 meter away from TV and radio, in order to avoid interference to them

◇There is no obstacles getting in the way of air circulation, cold air can evenly spread to all corners of the room;

◇In order to facilitate maintenance and repair, there should be certain distance between indoor unit and obstacles;

◇Refrigerant R22 is used for this unit, which is non-flammable and non-toxic gas. As the proportion of refrigerant is bigger than air, so if it leaks the gas will be filled on the ground. Therefore, if the units mounted on a closed room there must be good ventilation to prevent suffocation. In case of leakage of refrigerant, units should immediately stop running, and contact with maintenance personnel in time. There must be no fire at the site, because the refrigerant will turn to harmful gas when get to the fire.

7.3 The distance between indoor unit and obstacle

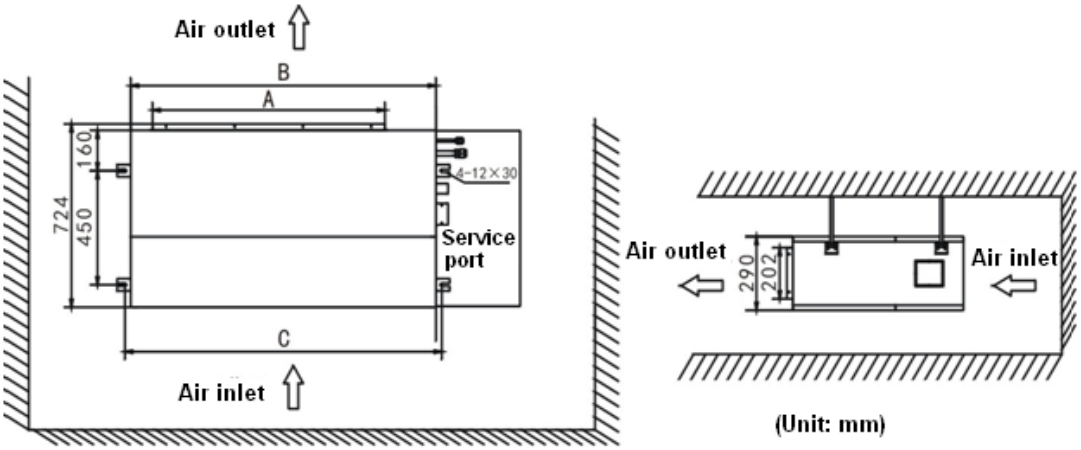

7.4 Indoor unit suspension

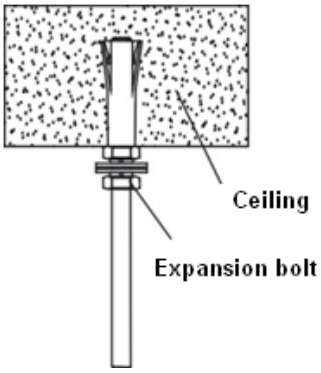

◇Select the suspension foundation

The suspension foundation is a structure of either wooden frame or reinforced concrete. It must be firm and reliable to bear at least 4 times weight of itself and capable of bearing vibration for long periods;

◇Fixing of suspension foundation

Fix the suspension bolts either as shown in the picture or by a steel or wooden bracket;

◇Adjust the relative positions of the suspension hooks to ensure the indoor unit is level in all directions. Use a spirit level to ensure this, otherwise water leakage, air leakage etc. will be resulted;

◇Tighten the nuts and ensure that the hooks are tightly connected to the nuts and shims, and there is no phenomenon of virtual hanging;

◇After the unit is installed ensure it is secure and does not shake or sway.

7.5 Duct pipeline installation

◇Using canvas to connect between indoor unit and duct pipeline, in order to save unnecessary vibration, as to the detail connection method please refer to the following picture.

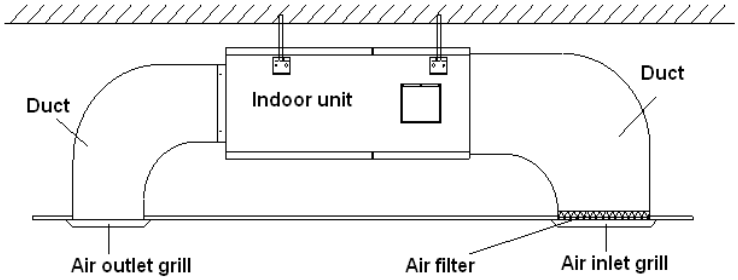

7.6 Drainage pipe

◇Drainage pipes must be wrapped with heat insulation materials, otherwise it will cause frost or droplets, see picture as follows:

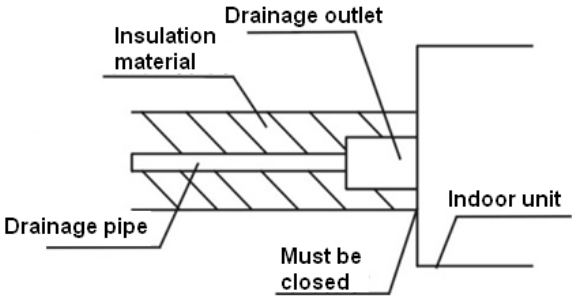

Heat insulation material: rubber insulation pipe with the thickness of more than 8mm

◇Drainage pipe must have a downward gradient (1 / 50 1 / 100).If the drain pipe is installed ups and downs, it will cause water backflow or leakage etc.

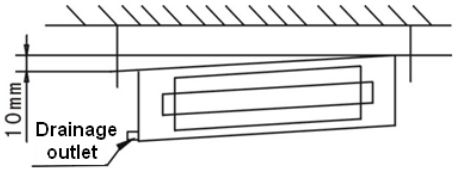

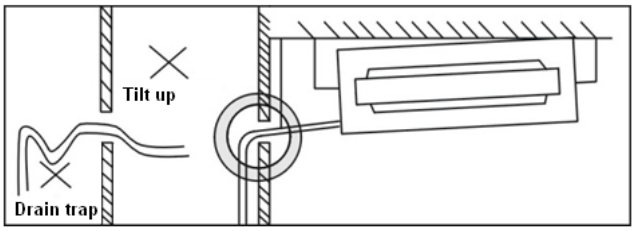

◇When finish installation please carry out the drainage test to ensure that the water flow through the pipeline fluently, and carefully observe the junction to ensure that there is no water leakage at the junction. If the unit is installed in the newly built house, strongly recommend that this test taken before the CFiling installation. Even it is the heating only unit, this test is unavoidable.

7.7 Remote controller receiver

◇Installation site: recommend that the receiver is mounted with the distance of 30~50 cm to the indoor unit air outlet(on your choice as well), while must ensure that the receiver can get the signal that the remote controller sends, please refer to the following installation picture:

◇Mounting hole set up: please use certain instrument to dig a square hole with 88*88mm on the ceiling

◇Remote controller receiver installation.

Hold the two sides (with clip sides) of the receiver, set the spring clip in the vertical way then put it into the mounting hole, if the two sides of the receiver is in the same level with the ceiling the installation is finished.

◇Signal line connection: connect the wire of remote controller receiver to the CN-DISP terminal board on PCB of indoor unit wire box then fix it.

8 Explode view

ALMD-C(H)18/4R1

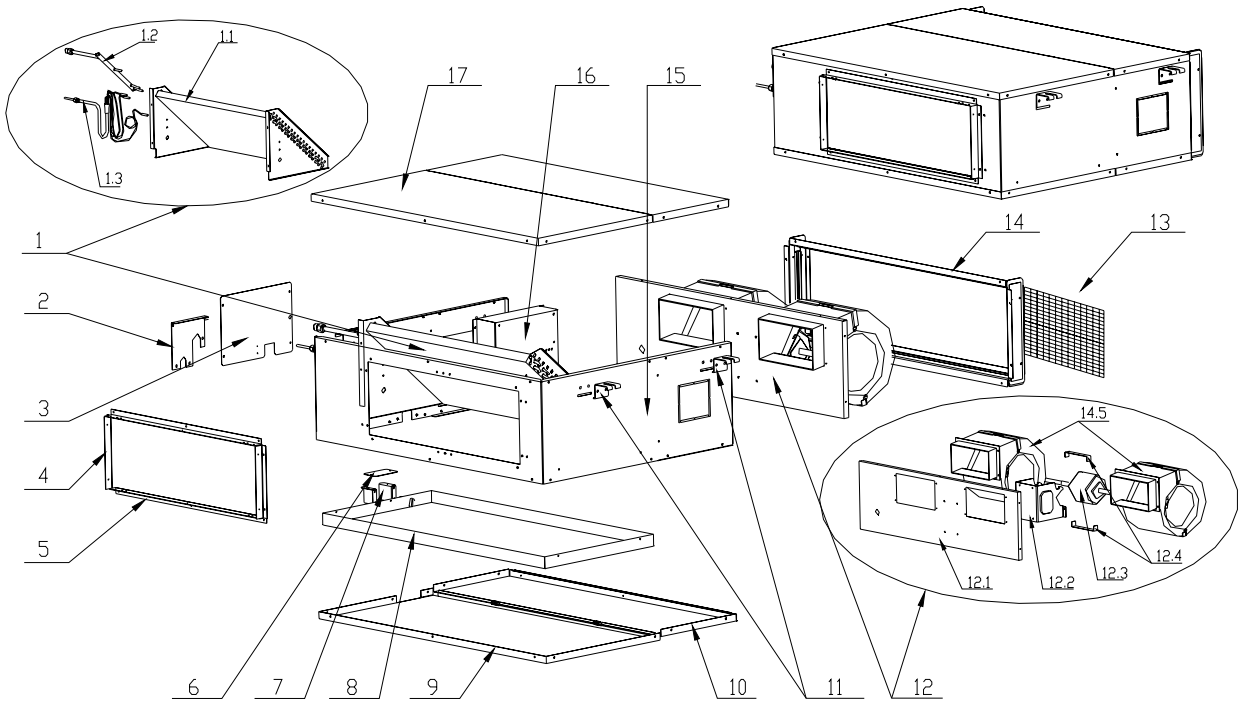

ALMD-C(H)18/4R1 spare parts list

N0.	Chinese name	Part Name	Quantity	Unit
1	蒸发器总成	Evaporator part	1	Set
1.1	蒸发器组件	Evaporator assembly	1	Set
1.2	蒸发器出气管组件	Evaporator liquid input pipe assembly	1	Set
1.3	蒸发器进液管组件	Evaporator gas output pipe assembly	1	Set
2	阀板	Valve board	1	Pc
3	电控盒盖	Cover for electric components	1	Pc
4	出风法兰A	Air outlet flange A	2	Pcs
5	出风法兰B	Air outlet flange B	2	Pcs
6	排水管保护板B	Drainpipe bracket B	1	Pc
7	排水管保护板A	Drainpipe bracket A	1	Pc
8	凝水盘组件	Drip tray assembly	1	Set
9	底板	Chassis	1	Pc
10	回风盖板	Air inlet cover board	2	Pcs
11	吊钩	Pothook	4	Pcs
12	蜗壳固定板组件	Centrifugal fan fasten board assembly	1	Set
12.1	蜗壳固定板	Centrifugal fan fasten board	1	Pc
12.2	电机架组件	Motor bracket assembly	1	Set
12.3	室内风扇电机 YSK100-4-50 G	Fan motor YSK100-4-50 G	1	Pc
12.4	电机抱攀	Fan motor fixity	2	Pcs
12.5	离心风机	Centrifugal fan motor assembly	2	Pcs
13	空气过滤器 850×245×7mm	Air filter 850×245×7mm	1	Pc

14	过滤网滑道组件	slideway assembly	1	Set
14.1	左右滑道组件	Left&Right slideway assembly	2	Sets
14.2	上下滑道组件	Up&down slideway assembly	2	Sets
14.3	左右过滤器法兰	Left&Right france	2	Pc
14.4	上下过滤器法兰	Up&down france	2	Pc
15	围板	Boarding	1	Pc
16	电控盒总成	Electric assembly	1	Set
16.1	控制板	PCB board QRDL-3F-HCE1	1	Pc
16.2	变压器 QC2-E1	Transformer	1	Pc
16.3	回风温度传感器	Sensor 5K3470 1	1	Pc
16.4	盘管温度传感器	Sensor 5K3470 2	1	Pc
16.5	端子板 7位	Terminal board	1	Pc
16.6	电控盒组件	Electric components box	1	Set
17	顶盖板	Top cover board	1	Pc

ALMD-C(H)24/4R1

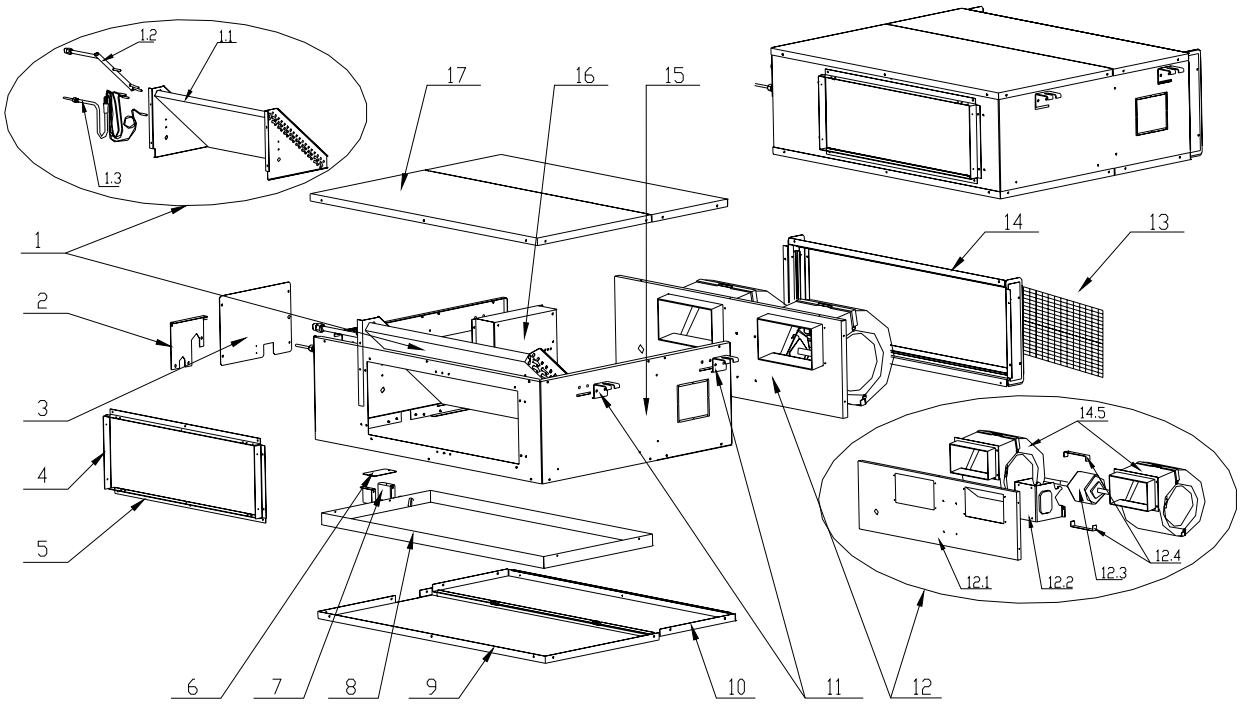

ALMD-C(H)24/4R1 spare parts list

N0.	Chinese name	Part Name	Quantity	Unit
1	蒸发器总成	Evaporator part	1	Set
1.1	蒸发器组件	Evaporator assembly	1	Set
1.2	蒸发器出气管组件	Evaporator liquid input pipe assembly	1	Set
1.3	蒸发器进液管组件	Evaporator gas output pipe assembly	1	Set
2	阀板	Valve board	1	Pc
3	电控盒盖	Cover for electric components	1	Pc
4	出风法兰 A	Air outlet flange A	2	Pcs
5	出风法兰 B	Air outlet flange B	2	Pcs
6	排水管保护板 B	Drainpipe bracket B	1	Pc
7	排水管保护板 A	Drainpipe bracket A	1	Pc
8	凝水盘组件	Drip tray assembly	1	Set
9	底板	Chassis	1	Pc
10	回风盖板	Air inlet cover board	2	Pcs
11	吊钩	Pothook	4	Pcs
12	蜗壳固定板组件	Centrifugal fan fasten board assembly	1	Set
12.1	蜗壳固定板	Centrifugal fan fasten board	1	Pc
12.2	电机架组件	Motor bracket assembly	1	Set
12.3	室内风扇电机 YSK150-4G-50	Fan motor YSK150-4G-50	1	Pc
12.4	电机抱攀	Fan motor fixity	2	Pcs
12.5	离心风机	Centrifugal fan motor assembly	2	Pcs
13	空气过滤器 850×245×7mm	Air filter 850×245×7mm	1	Pc
14	过滤网滑道组件	slideway assembly	1	Set

14.1	左右滑道组件	Left&Right slideway assembly	2	Sets
14.2	上下滑道组件	Up&down slideway assembly	2	Sets
14.3	左右过滤器法兰	Left&Right france	2	Pcs
14.4	上下过滤器法兰	Up&down france	2	Pcs
15	围板	Boarding	1	Pc
16	电控盒总成	Electric assembly	1	Set
16.1	控制板	PCB board QRDL-3F-HCE1	1	Pc
16.2	变压器 QC2-E1	Transformer	1	Pc
16.3	回风温度传感器	Sensor 5K3470 1	1	Pc
16.4	盘管温度传感器	Sensor 5K3470 2	1	Pc
16.5	端子板 7 位	Terminal board	1	Pc
16.6	电控盒组件	Electric components box	1	Set
17	顶盖板	Top cover board	1	Pc

ALMD-C(H)36/5R1

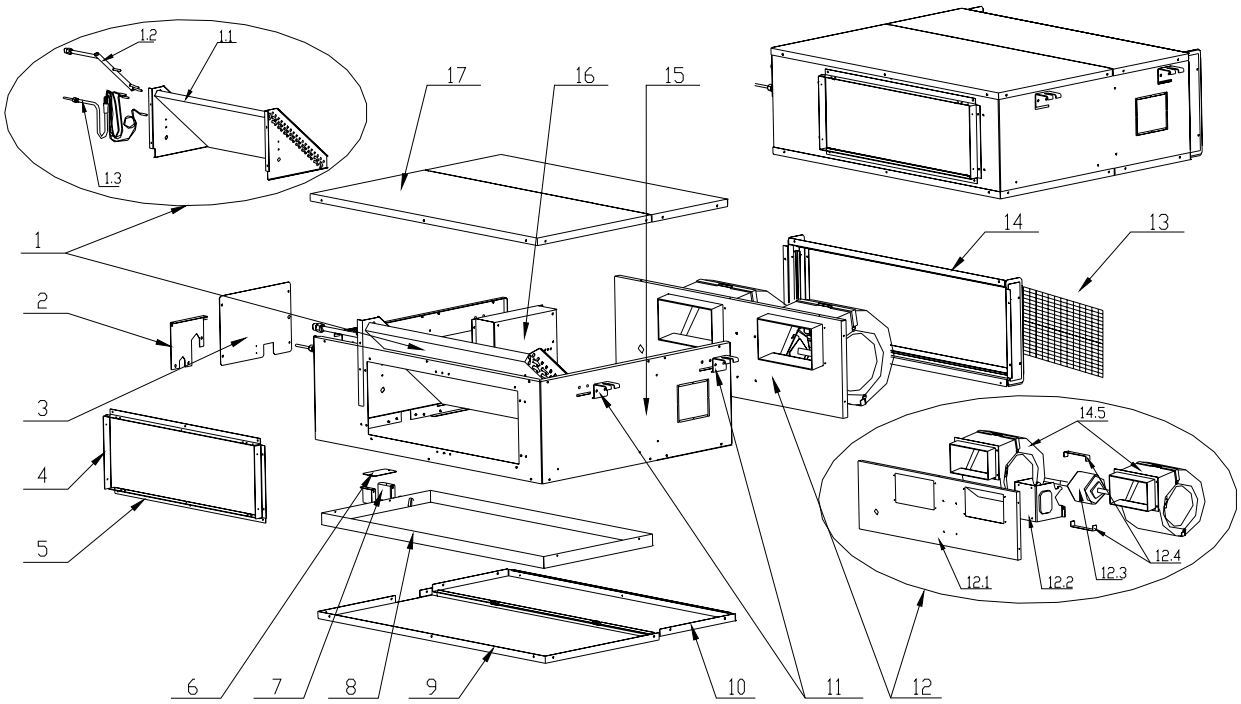

ALMD-C(H)36/5R1 spare parts list

N0.	Chinese name	Part Name	Quantity	Unit
1	蒸发器总成	Evaporator part	1	Set
1.1	蒸发器组件	Evaporator assembly	1	Set
1.2	蒸发器出气管组件	Evaporator liquid input pipe assembly	1	Set
1.3	蒸发器进液管组件	Evaporator gas output pipe assembly	1	Set
2	阀板	Valve board	1	Pc
3	电控盒盖	Cover for electric components	1	Pc
4	出风法兰 A	Air outlet flange A	2	Pcs
5	出风法兰 B	Air outlet flange B	2	Pcs
6	排水管保护板 B	Drainpipe bracket B	1	Pc
7	排水管保护板 A	Drainpipe bracket A	1	Pc
8	凝水盘组件	Drip tray assembly	1	Set
9	底板	Chassis	1	Pc
10	回风盖板	Air inlet cover board	2	Pcs
11	吊钩	Pothook	4	Pcs
12	蜗壳固定板组件	Centrifugal fan fasten board assembly	1	Set
12.1	蜗壳固定板	Centrifugal fan fasten board	1	Pc
12.2	电机架组件	Motor bracket assembly	1	Set
12.3	室内风扇电机 YSK100-4-50 G	Fan motor YSK100-4-50 G	1	Pc
12.4	电机抱攀	Fan motor fixity	2	Pcs
12.5	离心风机	Centrifugal fan motor assembly	2	Pcs
13	空气过滤器 850×245×7mm	Air filter 850×245×7mm	1	Pc
14	蜗壳固定板组件	Centrifugal fan fasten board assembly	1	Set

14.1	蜗壳固定板	Centrifugal fan fasten board	1	Pc
14.2	电机架组件	Motor bracket assembly	1	Set
14.3	室内风扇电机 YSK-180-4P	Fan motor YSK-180-4P	1	Pc
14.4	电机抱攀	Fan motor fixity	2	Pcs
14.5	离心风机	Centrifugal fan motor assembly	2	Pcs
16	电控盒总成	Electric assembly	1	Set
16.1	控制板	PCB board QRD-SN3F-HCE1	1	Pc
16.2	变压器 QC2-E1	Transformer	1	Pc
16.3	回风温度传感器	Sensor 5K3470 1	1	Pc
16.4	盘管温度传感器	Sensor 5K3470 2	1	Pc
16.5	端子板 5 位	Terminal board	1	Pc
16.6	电控盒组件	Electric components box	1	Set
17	顶盖板	Top cover board	1	Pc

ALMD-C(H)48/5R1, ALMD-C(H)60/5R1

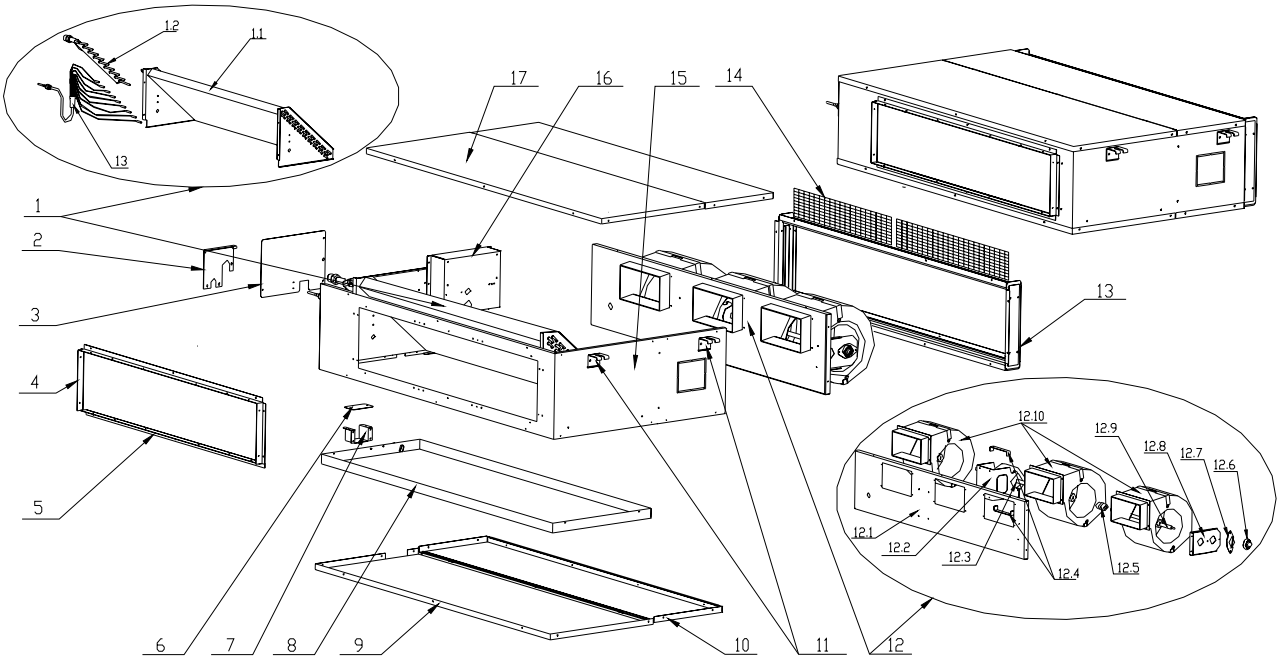

ALMD-C(H)48/5R1, ALMD-(H)60/5R1 spare parts list

N0.	Chinese name	Part Name	Quantity	Remark
1	蒸发器总成	Evaporator part	1	Set
1.1	蒸发器组件	Evaporator assembly	1	Set
1.2	蒸发器集气管组件	Evaporator liquid input pipe assembly	1	Set
1.3	蒸发器进液管组件	Evaporator gas output pipe assembly	1	Set
2	阀板	Valve board	1	Pc
3	电控盒盖	Cover for electric components	1	Pc
4	出风法兰A	Air outlet flange A	2	Pcs
5	出风法兰B	Air outlet flange B	2	Pcs
6	排水管保护板B	Drainpipe bracket B	1	Pc
7	排水管保护板A	Drainpipe bracket A	1	Pc
8	凝水盘组件	Drip tray assembly	1	Set
9	底板	Chassis	1	Pc
10	回风盖板	Air inlet cover board	2	Pcs
11	吊钩	Pothook	4	Pcs
12	蜗壳固定板组件	Centrifugal fan fasten board assembly	1	Set
12.1	蜗壳固定板	Centrifugal fan fasten board	1	Pc
12.2	电机架组件	Motor bracket assembly	1	Set
12.3	室内风扇电机 YSK-180-4P	Fan motor YSK-180-4P	1	Pc
12.4	电机抱攀	Fan motor fixity	2	Pcs
12.5	联轴器 Φ14	Coupling	1	Pc
12.6	橡胶轴承	Rubber axletree	1	Pc
12.7	橡胶轴承压板	Rubber axletree board	1	Pc

12.8	橡胶轴承支架	Rubber axletree bracket	1	Set
12.9	加长轴φ14×470	Axesφ14×470	1	Pc
12.10	离心风机	Centrifugal fan motor assembly	3	Pcs
13	过滤网滑道组件	slideway assembly	1	Set
13.1	左右滑道组件	Left&Right slideway assembly	2	Sets
13.2	上下滑道组件	Up&down slideway assembly	2	Sets
13.3	左右过滤器法兰	Left&Right france	2	Pcs
13.4	上下过滤器法兰	Up&down france	2	Pcs
14	空气过滤器	Air filter	2	Pcs
15	围板	Boarding	1	Pc
16	电控盒总成	Electric assembly	1	Set
16.1	控制板 QRD-SN3F-HCE1	PCB board QRD-SN3F-HCE1	1	Pc
16.2	变压器 QC2-E1	Transformer	1	Pc
16.3	回风温度传感器	Sensor 5K3470 1	1	Pc
16.4	盘管温度传感器	Sensor 5K3470 2	1	Pc
16.5	端子板 5位	Terminal board	1	Pc
16.6	电控盒组件	Electric components box	1	Set
17	顶盖板	Top cover board	1	Pc

High static pressure duct type

1.Feature.....113

2.Specfication 115

3.Capacity amendment.....120

4.Dimension 122

5.Electrical wiring and connection.....123

6.Fan performance.....128

7.Installation.....129

8.Explored view 133

1. Feature

Duct type air conditioner (Cooling-only or Heat pump), named for the duct can be installed to connect with air outlet and inlet. According to different ESP, it divides into Low ESP Duct type (12~30Pa), Medium ESP Duct type (50~80Pa) and High ESP Duct type (higher than 80Pa). The series of products static pressure for 196Pa High ESP Duct type.

Application occasions:

Small super market, hotel, restaurant, office, meeting room and so on.

Features:

◇ ESP range ie optional ,applicant place varies,ESP can reach 196Pa,It suits 6.5m super high ceiling air supply;

◇ According to place designing different air-outlet, The type of air supply and air return was set flexibly and appropriate. The No matter where you are, it will provide confirtable for you.

◇ Conceal design, the unit is installed inside of ceiling, doesn't take room space.

◇ With Setting or Auto two operation modes, multi speed wind, makes you feel more comfortable;

◇ Auto restart;

◇ Standard wired controller and optional remote controller;

◇ Special insulation design, achieces high heat insulation efficiency and no condensation on shell;

◇ units with low ambient temperature cooling function, which makes the unit can run normally on the condition that the ambient temperature falls down to -15℃;

◇ Failure automatic detection, if there is a failure, the indicator will flash and the failure code will display on the wired controller, the failure cause is easier to be found..

Function introduction

Function	Function Item	ALHD-C(H)**			
		24/4	36/5	48/5	60/5
Protection	High pressure protection	—	●	●	●
	Low pressure protection	—	●	●	●
	Compressor overloading protection	—	●	●	●
	High exh. temperate protection	—	●	●	●
	Phase protection(Phase-loss, phase- reverse)	—	●	●	●
	Over-heating protection	●	●	●	●
	Anti-freezing protection	●	●	●	●
	Sensor failure alarm	●	●	●	●
	Failure code display	●	●	●	●
Comfort	Cooling	●	●	●	●
	Heating	●	●	●	●
	3-Speed	●	●	●	●
	Adjustable ESP	—	—	—	—
	Auto-restart	●	●	●	●
	Anti-cold wind	●	●	●	●
	Afterheat wind blowing	●	●	●	●
	Timing ON/OFF	●	●	●	●
Operating	Time display	●	●	●	●
	Operation mode display	●	●	●	●
	Fan speed display	●	●	●	●
	Defrost display	●	●	●	●
	Timing ON/OFF display	●	●	●	●
	Wind angle display	—	—	—	—
	Sleeping mode display	●	●	●	●
Running	Auto start	●	●	●	●
	Dehumidifying	●	●	●	●
	Auto defrost	●	●	●	●
	Ventilation function	●	●	●	●
	Low ambient temperature cooling	●	●	●	●
Health	Washable air filter	●	●	●	●
	Fresh air interface	—	—	—	—
Installation	Left/right drainage	—	—	—	—
	Left/right pipe connection	—	—	—	—
	Down/back air suction	—	—	—	—
	Installation indicating board	—	—	—	—
	Two kinds of static pressure adjustable	—	—	—	—

Note: ●means have this function —means don't have this function

2. Specfication

Model	Indoor		ALHD-C24/4R1	ALHD-H24/4R1	ALHD-C36/5R1
	Outdoor		AL-C24/4R1(U)	AL-H24/4R1(U)	AL-C36/5R1(U)
Factory Model	Indoor		ALHi-24B4/R1-B	ALHi-H24B4/R1-B	ALHi-36A5/R1-B
	Outdoor		AL-24B4/R1(T)	AL-H24B4/R1(T)	AL-36A5/R1(T)
Power Supply		V~,Hz,Ph	220~240,50,1	220~240,50,1	380~415,50,3
Capacity	Cooling	Btu/h	24000	24000	36000
		kW	7.2	7.2	10.6
	Heating	Btu/h	/	27500	/
		kW	/	8.1	/
Electric Data	Rated Cooling Power Input	kW	2.70	2.70	3.85
	Rated Heating Power Input	kW	/	2.50	/
	Rated Cooling Current	A	12.36	12.36	7.1
	Rated Heating Current	A	/	11.49	/
Performance	EER	W/W	2.67	2.67	2.75
	COP	W/W	/	3.24	/
Indoor Fan Fotor	Model		YDK200-4	YDK200-4	YDK200-4
	Brand		KANGBAO	KANGBAO	KANGBAO
	Output Power x Fan quantity	W	200*1	200*1	200*1
	Capacitor	uF	10	10	10
	Speed (Hi/Mi/Lo)	r/min	1230/1000/800	1230/1000/800	1230/1000/800
Indoor Coil	Number Of Row		3	3	3
	Tube Pitch(a)x Row Pitch(b)	mm	22.0×19.05	22.0×19.05	22.0×19.05
	Fin Spacing	mm	1.6	1.6	1.4
	Fin Material		Hydrophilic aluminum fin		
	Tube Outside Dia.and Material	mm	φ7.94,Inner grooved	φ7.94,Inner grooved	φ7,Inner grooved
	Coil Length x Height x Width	mm	700*328*38.1	700*328*38.1	700*328*38.1
	Heat Exchanging Area	m^2	9.83	9.83	11.12
Indoor Unit	Indoor Air Flow (Hi/Mi/Lo)	m^3/h	1200/960/840	1200/960/840	1500/1200/1050
	Noise Level(Hi/Mi/Lo)	dB(A)	53/50/44	53/50/44	57/54/45
	External Static Pressure	Pa	196	196	150
	Net Dimension (W*H*D)	mm	1000×719×380	1000×719×380	1000×719×380
	Packing Dimension (W*H*D)	mm	1035×760×415	1035×760×415	1035×760×415
	Net Weight	Kg	35	35	35
	Gross Weight	Kg	37	37	37
Refrigerant Pipe	Liquid Side	mm	9.52	9.52	9.52
	Gas Side	mm	15.88	15.88	15.88
	Max. Refrigerant Pipe Length	m	30	30	50

	Max. Difference In Level	m	15	15	30
Operation Temperature Range		℃	16~32	16~32	16~32
Ambient Temperature Range(Cooling/Heating)		℃	-5~49	-5~49/-15~24	-5~49
Application Area		m^2	28-47	28-47	42-70
Connection Wiring	Power Wiring(Indoor)	mm^2	/	/	$3\times1mm^2$
	Power Wiring(Outdoor)	mm^2	$3\times4mm^2$	$3\times4mm^2$	$5\times2.5mm^2$
	Signal Wiring	mm^2	$3\times1mm^2+2\times1mm^2$	$3\times1mm^2+3\times1mm^2$	$2\times1mm^2$
Wireless Remote Controller			G-XK-HCE3	G-XK-HCE3	G-XK-HCE3
Qty'per 20'& 40'&40HQ(Only For Reference)		Set	36/74/104	36/74/104	25/60/76

Note:

1. Working condition of the cooling capacity measured: Inside the room DB temperature 27℃,WB temperature19℃;Outside of the room DB temperature 35℃,WB temperature 24℃;Working condition of the heating capacity measured:Inside the room DB temperature 20℃,Outside of the room DB temperature 7℃,WB temperature 6℃。
2. Parameters above are all measured when the connecting pipe is 5 meters.
3. Parameters above may be modified as product improvement. We keep the right to change the product specifications without prior notice, please take the parameters listed on the nameplate as criterion.

Model	Indoor		ALHD-H36/5R1	ALHD-C48/5R1	ALHD-H48/5R1
	Outdoor		AL-H36/5R1(U)	AL-C48/5R1(U)	AL-H48/5R1(U)
Factory Model	Indoor		ALHi-H36A5/R1-B	ALHi-48A5/R1-B	ALHi-H48A5/R1-B
	Outdoor		AL-H36A5/R1(T)	AL-48A5/R1(T)	AL-H48A5/R1(T)
Power Supply		V~,Hz,Ph	380~415,50,3	380~415,50,3	380~415,50,3
Capacity	Cooling	Btu/h	36000	48000	48000
		kW	10.6	14.0	14.0
	Heating	Btu/h	40000	/	53000
		kW	11.7	/	15.5
Electric Data	Rated Cooling Power Input	kW	3.85	4.87	4.87
	Rated Heating Power Input	kW	3.50	/	5.13
	Rated Cooling Current	A	7.10	9.50	9.50
	Rated Heating Current	A	6.46	10.00	10.00
Performance	EER	W/W	2.75	2.87	2.87
	COP	W/W	3.34	/	3.02
Indoor Fan Fotor	Model		YDK200-4	YDK200-4	YDK200-4
	Brand		KANGBAO	KANGBAO	KANGBAO
	Output Power x Fan quantity	W	200*1	200*2	200*2
	Capacitor	uF	10	10*2	10*2
	Speed (Hi/Mi/Lo)	r/min	1230/1000/800	1230/1000/800	1230/1000/800
Indoor Coil	Number Of Row		3	3	3
	Tube Pitch(a)x Row Pitch(b)	mm	22.0×19.05	20.5×12.7	20.5×12.7
	Fin Spacing	mm	1.4	1.5	1.5

	Fin Material		Hydrophilic aluminum fin		
	Tube Outside Dia.and Material	mm	φ7,Inner grooved	φ7,Inner grooved	φ7,Inner grooved
	Coil Length x Height x Width	mm	700*328*38.1	900*328*38.1	900*328*38.1
	Heat Exchanging Area	m^2	11.12	13.40	13.40
Indoor Unit	Indoor Air Flow (Hi/Mi/Lo)	m^3/h	2000/1600/1400	2000/1600/1400	2000/1600/1400
	Noise Level(Hi/Mi/Lo)	dB(A)	60/57/51	60/57/51	60/57/51
	External Static Pressure	Pa	196	196	196
	Net Dimension (W*H*D)	mm	1500/1200/1050	1200×719×380	1200×719×380
	Packing Dimension (W*H*D)	mm	57/54/45	1235×760×415	1235×760×415
	Net Weight	Kg	150	55	55
	Gross Weight	Kg	1000×719×380	58	58
Refrigerant Pipe	Liquid Side	mm	1035×760×415	9.52	9.52
	Gas Side	mm	35	19.05	19.05
	Max. Refrigerant Pipe Length	m	37	50	50
	Max. Difference In Level	m	30	30	30
Operation Temperature Range		℃	16~32	16~32	16~32
Ambient Temperature Range(Cooling/Heating)		℃	-5~49/-15~24	-5~49	-5~49/-15~24
Application Area		m^2	42-70	56-93	56-93
Connection Wiring	Power Wiring(Indoor)	mm^2	$3×1mm^2$	$3×1mm^2$	$3×1mm^2$
	Power Wiring(Outdoor)	mm^2	$5×2.5mm^2$	$5×2.5mm^2$	$5×2.5mm^2$
	Signal Wiring	mm^2	$2×1mm^2$	$2×1mm^2$	$2×1mm^2$
Wireless Remote Controller			G-XK-HCE3	G-XK-HCE3	G-XK-HCE3
Qty'per 20'& 40'&40HQ(Only For Reference)		Set	25/60/76	19/42/42	19/42/42

Note:

1. Working condition of the cooling capacity measured: Inside the room DB temperature 27℃,WB temperature19℃;Outside of the room DB temperature 35℃,WB temperature 24℃;Working condition of the heating capacity measured:Inside the room DB temperature 20℃,Outside of the room DB temperature 7℃,WB temperature 6℃。
2. Parameters above are all measured when the connecting pipe is 5 meters.
3. Parameters above may be modified as product improvement. We keep the right to change the product specifications without prior notice, please take the parameters listed on the nameplate as criterion.

Model	Indoor		ALHD-C60/5R1	ALHD-H60/5R1
	Outdoor		AL-C60/5R1(U)	AL-H60/5R1(U)
Factory Model	Indoor		ALHi-60A5/R1-B	ALHi-H60A5/R1-B
	Outdoor		AL-60A5/R1(T)	AL-H60A5/R1(T)
Power Supply		V~,Hz,Ph	380~415,50,3	380~415,50,3
Capacity	Cooling	Btu/h	60000	60000
		kW	17.6	17.6
	Heating	Btu/h	/	63500
		kW	/	18.5
Electric Data	Rated Cooling Power Input	kW	5.71	5.71

	Rated Heating Power Input	kW	/	6.00
	Rated Cooling Current	A	10.93	10.93
	Rated Heating Current	A	/	11.48
Performance	EER	W/W	3.08	3.08
	COP	W/W	/	3.08
Indoor Fan Fotor	Model		YDK200-4	YDK200-4
	Brand		KANGBAO	KANGBAO
	Output Power x Fan quantity	W	200*2	200*2
	Capacitor	uF	10*2	10*2
	Speed (Hi/Mi/Lo)	r/min	1230/1000/800	1230/1000/800
Indoor Coil	Number Of Row		3	3
	Tube Pitch(a)x Row Pitch(b)	mm	22.0×19.05	22.0×19.05
	Fin Spacing	mm	1.6	1.6
	Fin Material		Hydrophilic aluminum fin	
	Tube Outside Dia.and Material	mm	φ7.94,Inner grooved	φ7.94,Inner grooved
	Coil Length x Height x Width	mm	900*352*57.2	900*352*57.2
	Heat Exchanging Area	m^2	20.51	20.51
Indoor Unit	Indoor Air Flow (Hi/Mi/Lo)	m^3/h	2000/1600/1400	2000/1600/1400
	Noise Level(Hi/Mi/Lo)	dB(A)	60/57/51	60/57/51
	External Static Pressure	Pa	196	196
	Net Dimension (W*H*D)	mm	1200×719×380	1200×719×380
	Packing Dimension (W*H*D)	mm	1235×760×415	1235×760×415
	Net Weight	Kg	55	55
	Gross Weight	Kg	59	59
Refrigerant Pipe	Liquid Side	mm	9.52	9.52
	Gas Side	mm	19.05	19.05
	Max. Refrigerant Pipe Length	m	50	50
	Max. Difference In Level	m	30	30
Operation Temperature Range		℃	16~32	16~32
Ambient Temperature Range(Cooling/Heating)		℃	-5~49	-5~49/-15~24
Application Area		m^2	64-107	64-107
Connection Wiring	Power Wiring(Indoor)	mm^2	3×1mm^2	3×1mm^2
	Power Wiring(Outdoor)	mm^2	5×2.5mm^2	5×2.5mm^2
	Signal Wiring	mm^2	2×1mm^2	2×1mm^2
Wireless Remote Controller			G-XK-HCE3	G-XK-HCE3
Qty'per 20'& 40'&40HQ(Only For Reference)		Set	19/42/42	19/42/42

Note:

1. Working condition of the cooling capacity measured: Inside the room DB temperature 27℃,WB temperature19℃;Outside of the room DB temperature 35℃,WB temperature 24℃;Working condition of the heating capacity measured:Inside the room DB temperature 20℃,Outside of the room DB temperature 7℃,WB temperature 6℃。
2. Parameters above are all measured when the connecting pipe is 5 meters.

3. Parameters above may be modified as product improvement. We keep the right to change the product specifications without prior notice, please take the parameters listed on the nameplate as criterion.

3 Capacity amendment

3.1 Running range

Cooling capacity (Btu/h)		24000	36000	48000	60000
Power supply		220-240V~/50Hz	380-415V 3N~/50Hz		
Voltage		187~242V	320~420V		
Outdoor ambient temperature	Cooling	-5~49℃			
	Heating	-15~24℃			

3.2 Amendment coefficient of cooling capacity under different indoor/outdoor DB and WB temperature

Indoor air inlet temperature℃		Outdoor air inlet DB temperature℃				
DB	DB	25	30	35	40	43
23	16	0.98	0.94	0.89	0.85	0.82
25	18	1.05	1	0.95	0.90	0.87
27	19	1.1	1.05	1	0.95	0.91
28	20	1.12	1.07	1.02	0.96	0.93
30	22	1.19	1.13	1.08	1.02	0.99
32	24	1.26	1.20	1.15	1.08	1.05

Actual cooling capacity calculation:

Actual cooling capacity=amendment coefficient of cooling capacity × nominal cooling capacity

——nominal cooling capacity could be found from the performance parameters list

——amendment coefficient of cooling capacity could be found from table above.

3.3 Amendment coefficient of heating capacity under different indoor/outdoor DB and WB temperature

Indoor air inlet DB temperature ℃	Outdoor air inlet WB temperature ℃				
	-5	0	6	10	15
16	0.65	0.80	1.02	1.13	-
18	0.61	0.76	1.02	1.12	-
20	0.6	0.75	1	1.11	1.25
21	0.59	0.72	0.99	1.1	1.24
22	0.58	0.71	0.97	1.09	1.23
24	0.56	0.7	0.96	1.08	1.22

Actual heating capacity calculation:

Actual heating capacity=amendment coefficient of heating capacity × nominal heating capacity

——nominal heating capacity could be found from the performance parameters list

——amendment coefficient of heating capacity could be found from table above.

3.4 Amentdment coefficients of heating and cooling capacity under different height drop

Different Cooling Capacity modified coefficients at different height:

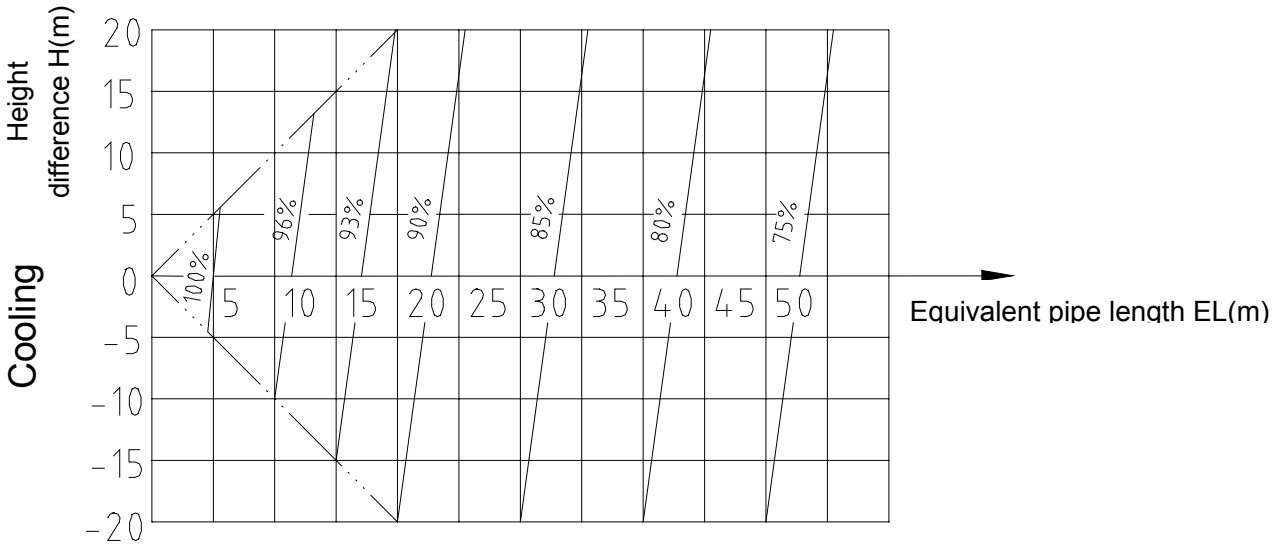

Note: H = Height of Outdoor Unit — Height of Indoor Unit

Different Heating Capacity modified coefficients at different height:

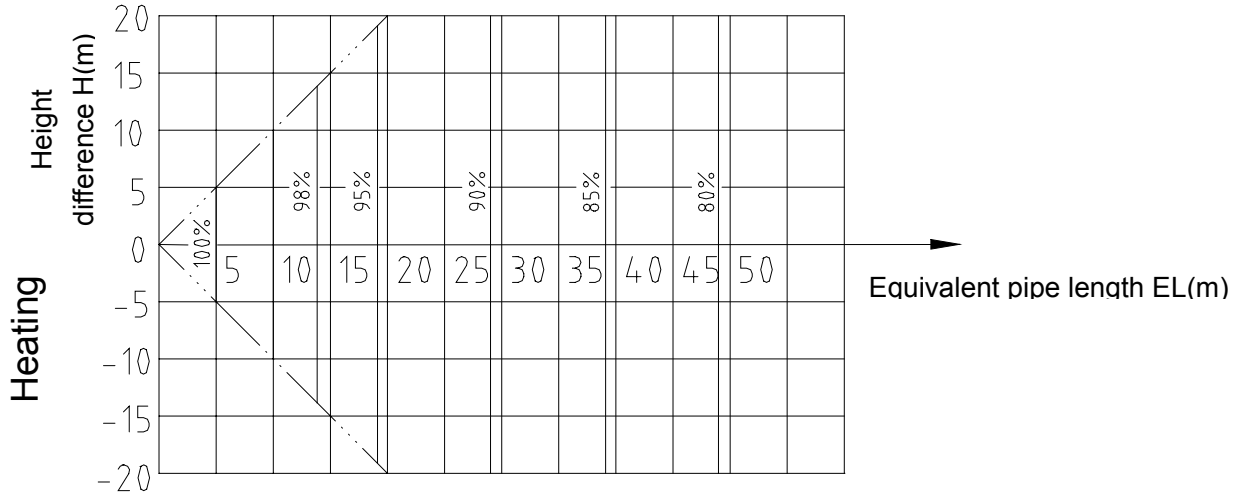

Note: H = Height of Outdoor Unit — Height of Indoor Unit

4. Dimension

ALHD-C(H)24/4R1

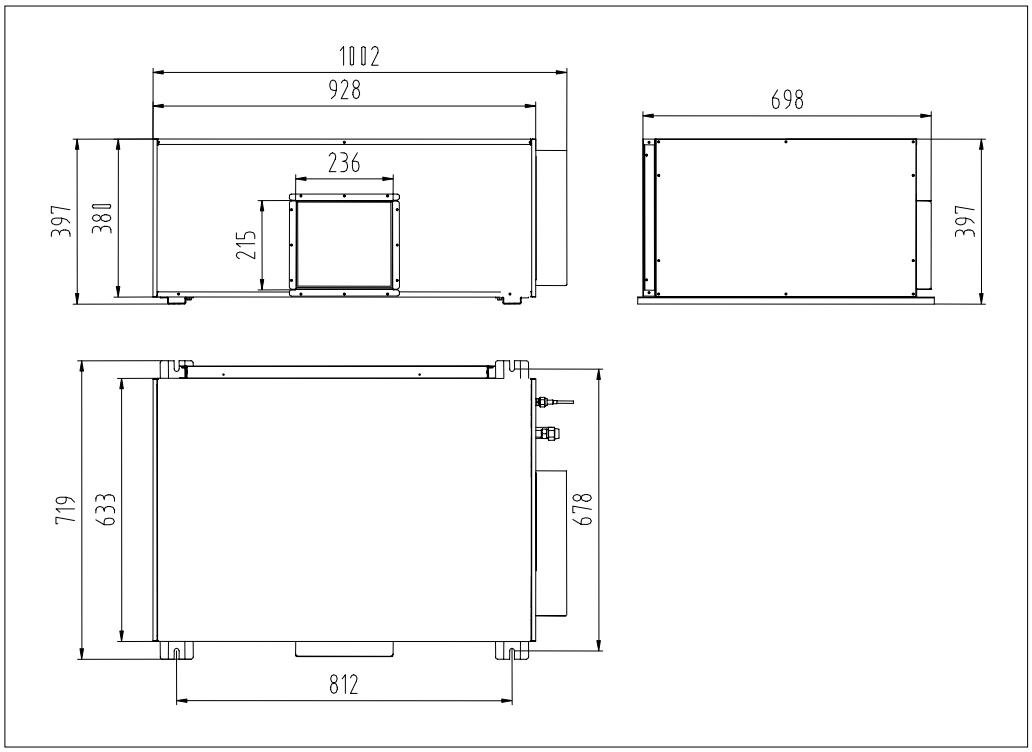

ALHD-C(H)36/5R1, ALHD-C(H)48/5R1, ALHD-C(H)60/5R1

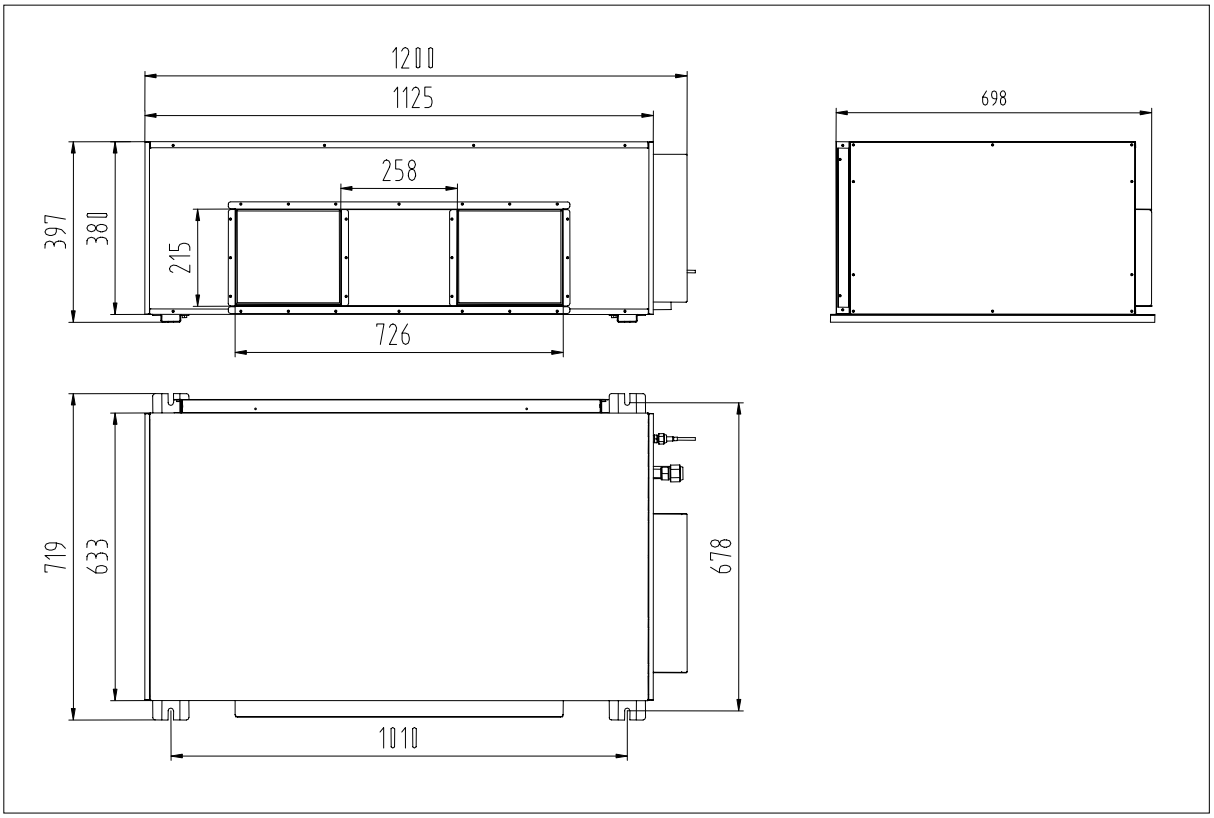

5 Electrical wiring and connection

ALHD-H24/4R1

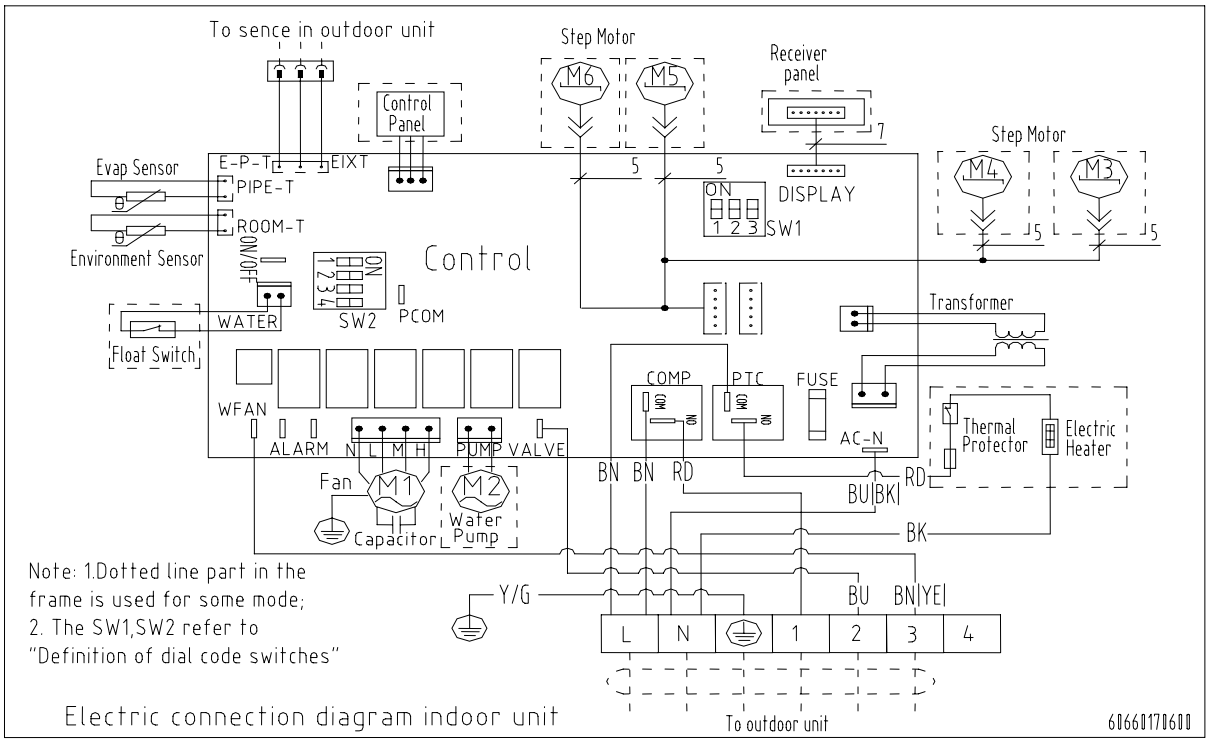

ALHD-C24/4R1

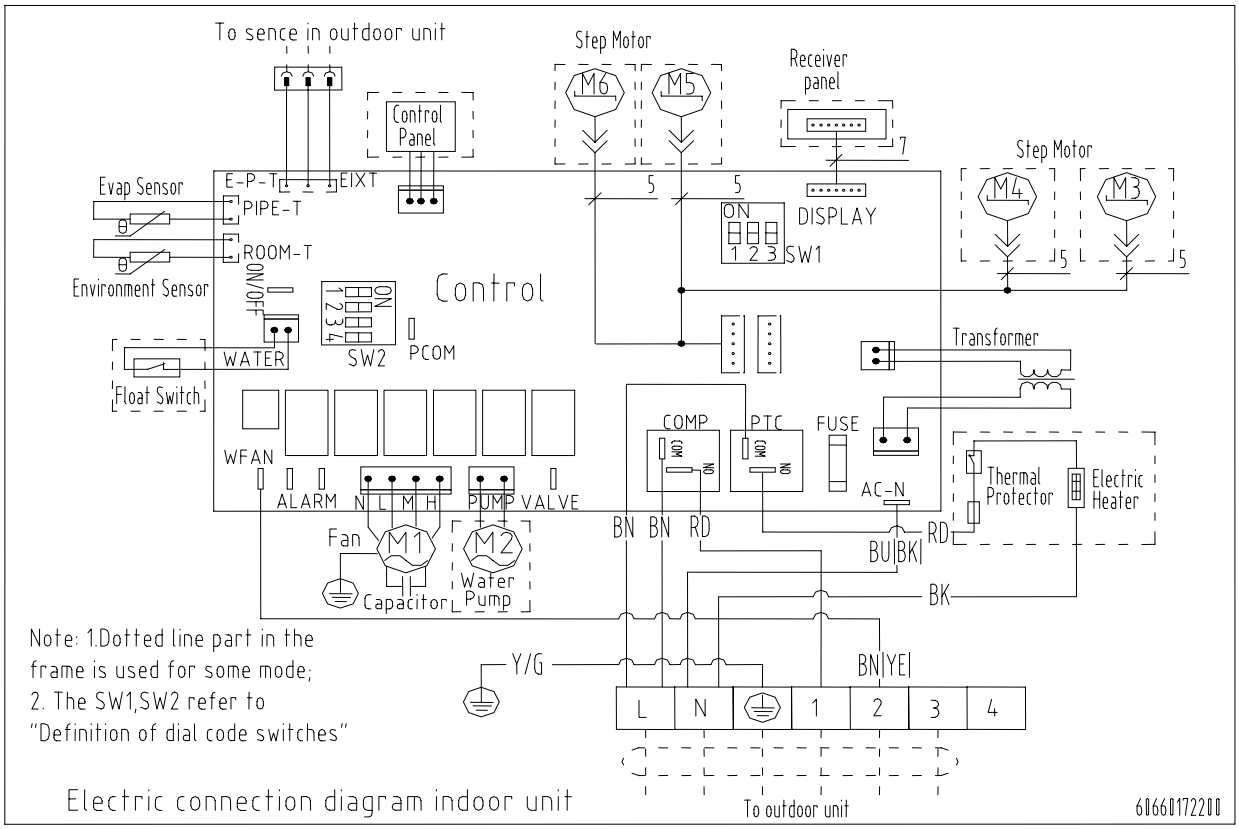

ALHD-C(H)36/5R1, ALHD-C(H)48/5R1, ALHD-C(H)60/5R1

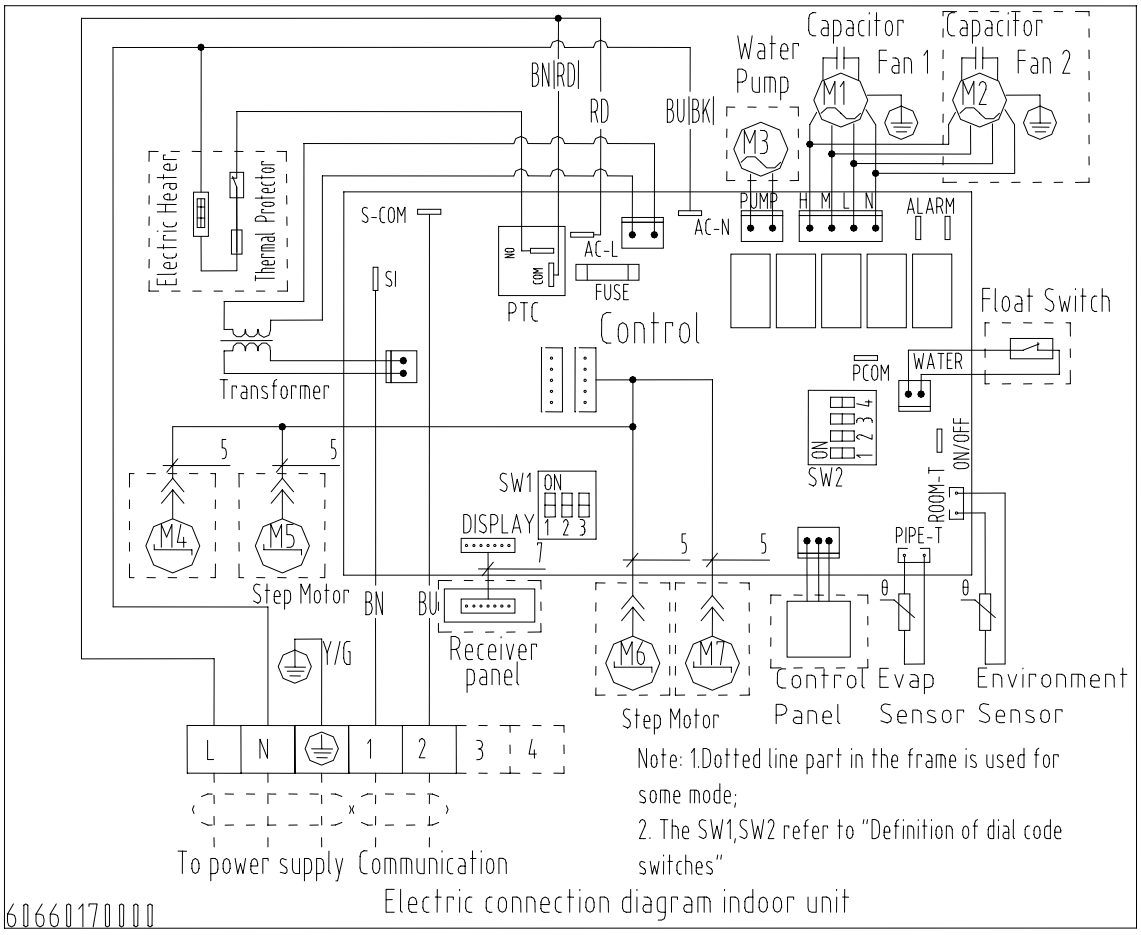

Introduction of Control Board sockets QRDL-3F(2S)-SYE1 (indoor unit) (match with the outdoor unit which the Power supply is 220V-240V, 1PH)

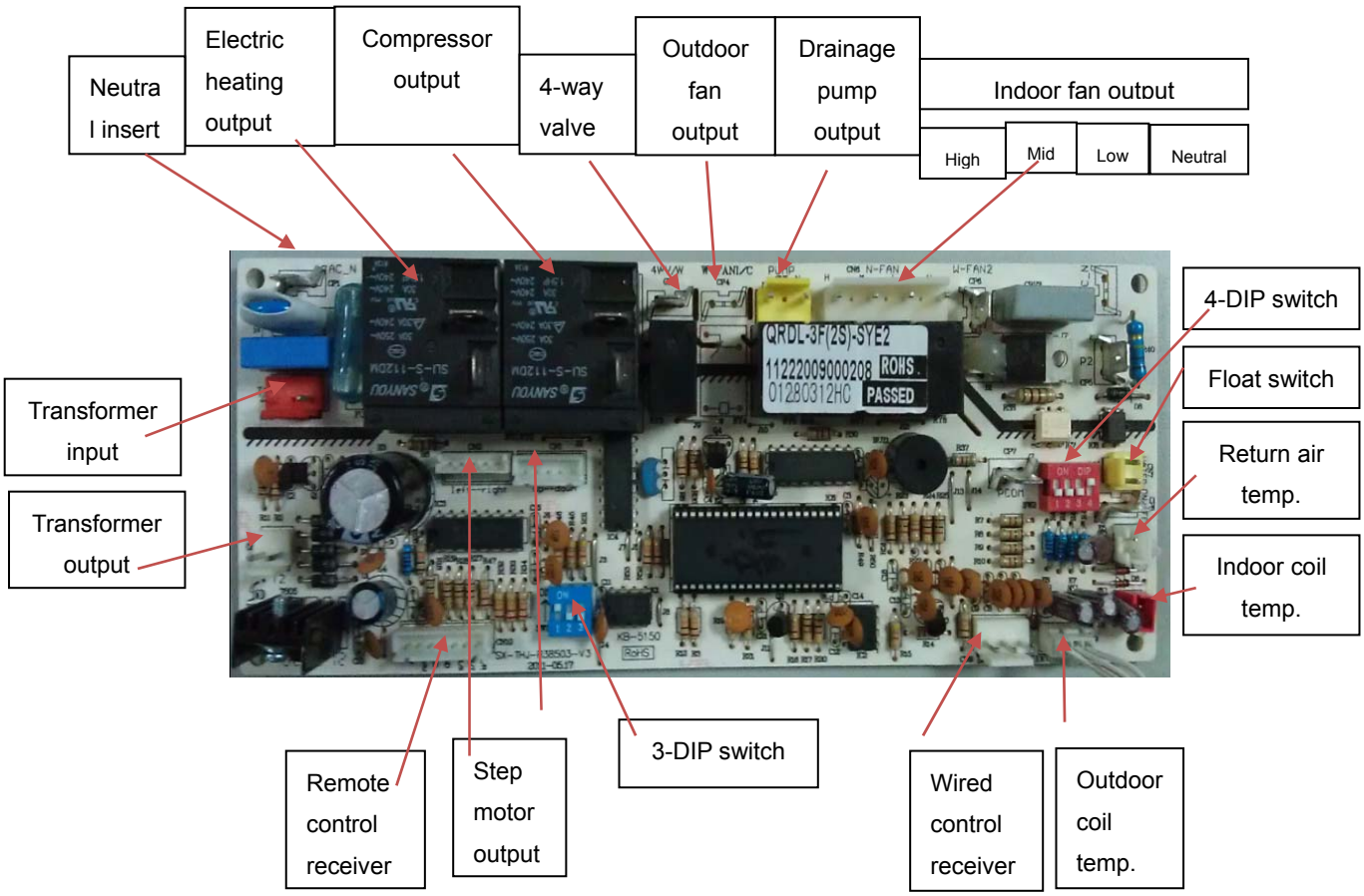

Introduction of control board QRD-SN3F(2S)-SYE1 sockets (Indoor unit) (match with the outdoor unit which the Power supply is 380V-415V, 3PH)

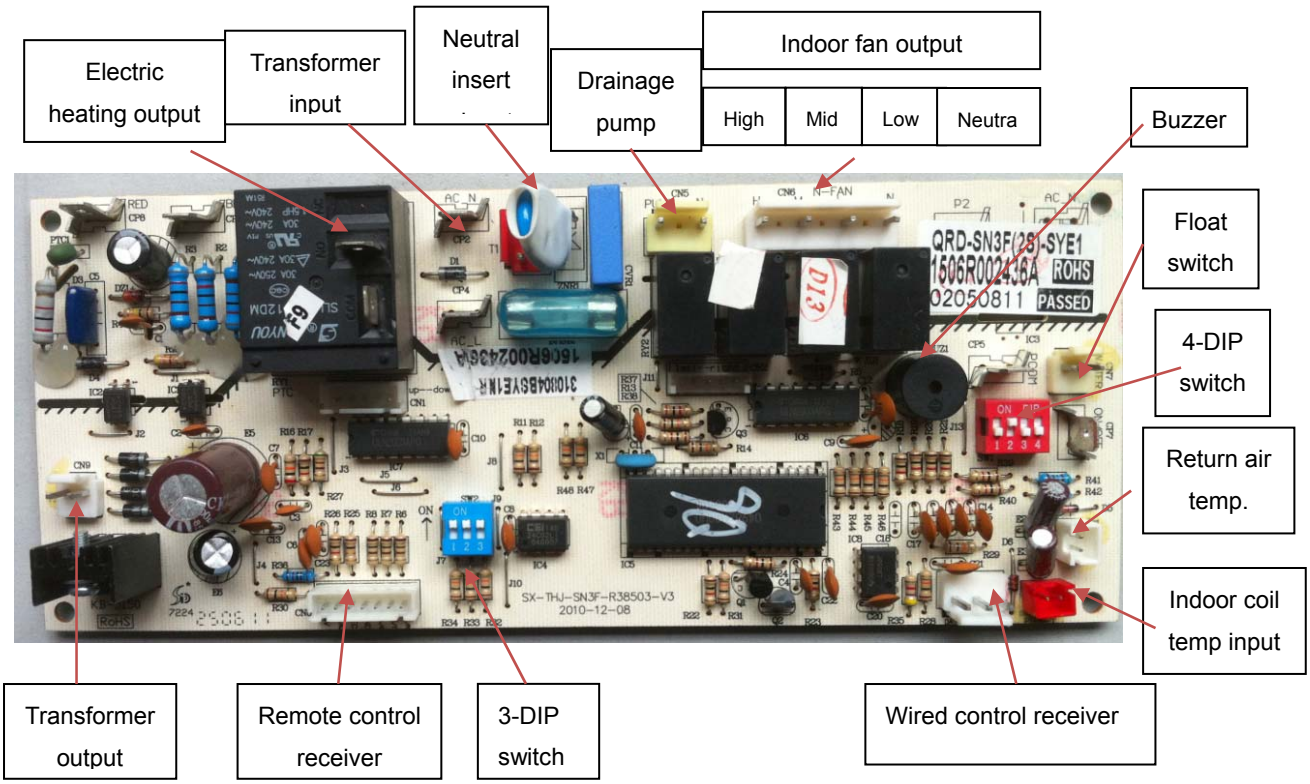

Indoor unit and outdoor unit electrical connection

ALHD-H24/4R1

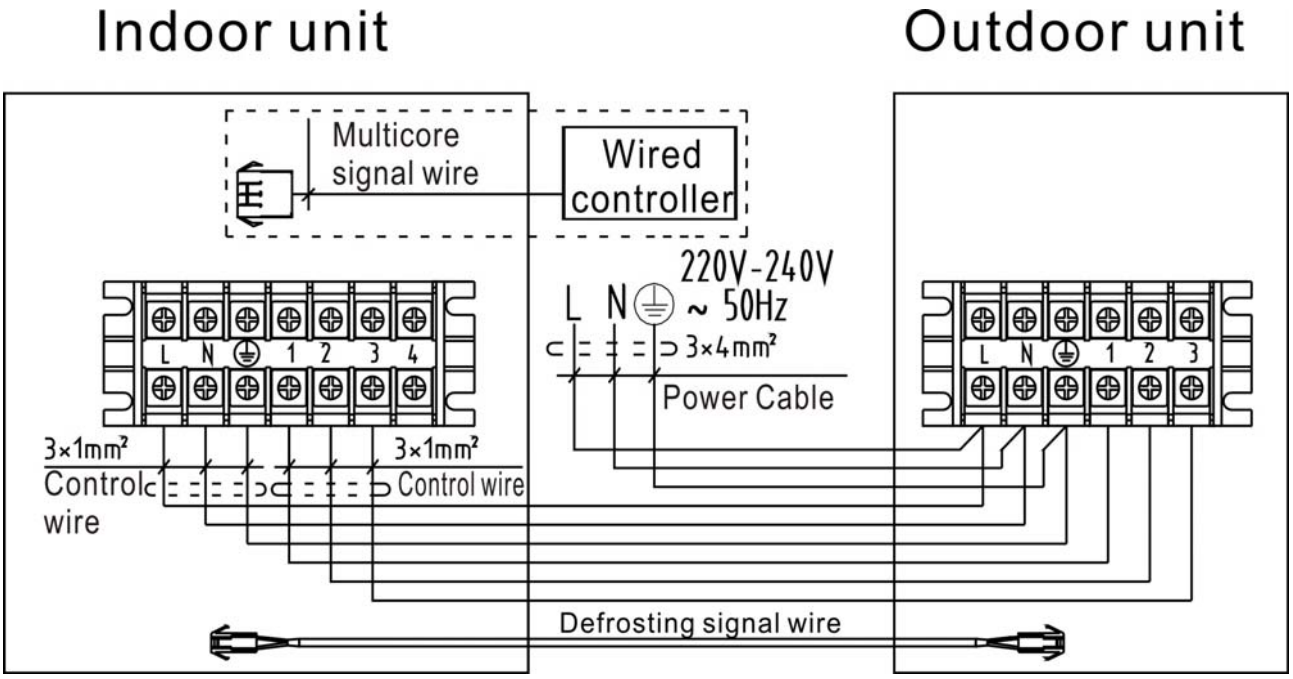

ALHD-C24/4R1

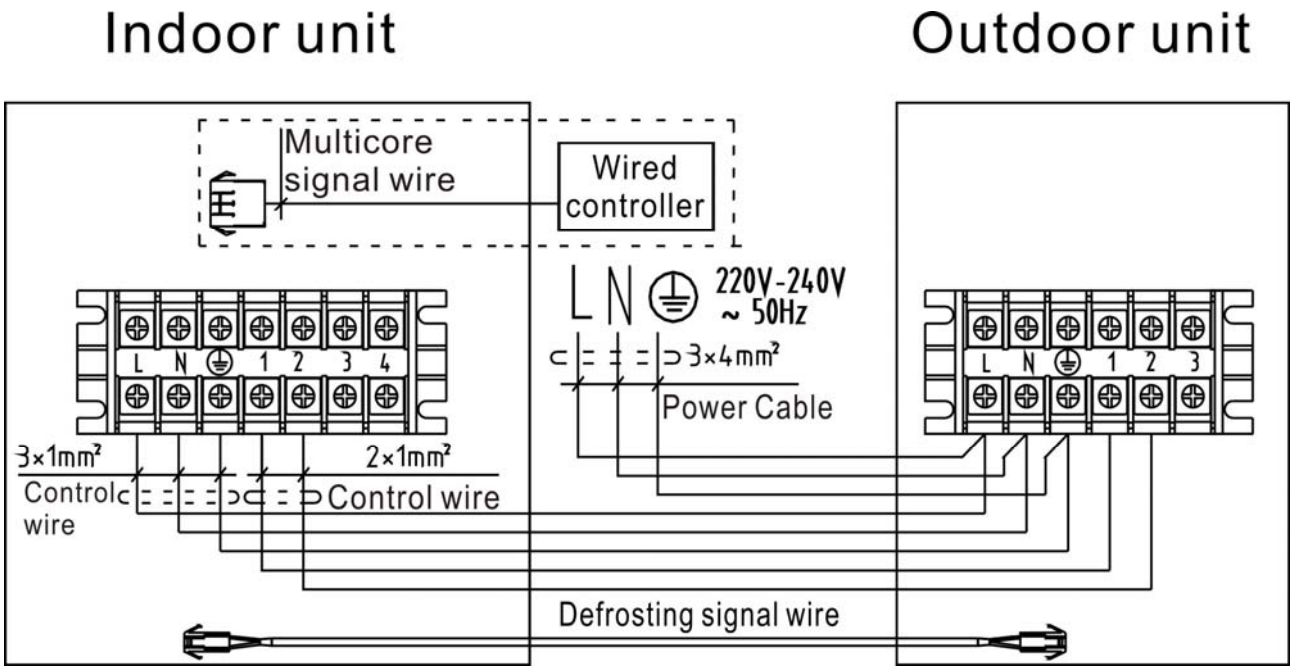

ALHD-C(H)36/5R1,ALHD-C(H)48/5R1, ALHD-C(H)60/5R1

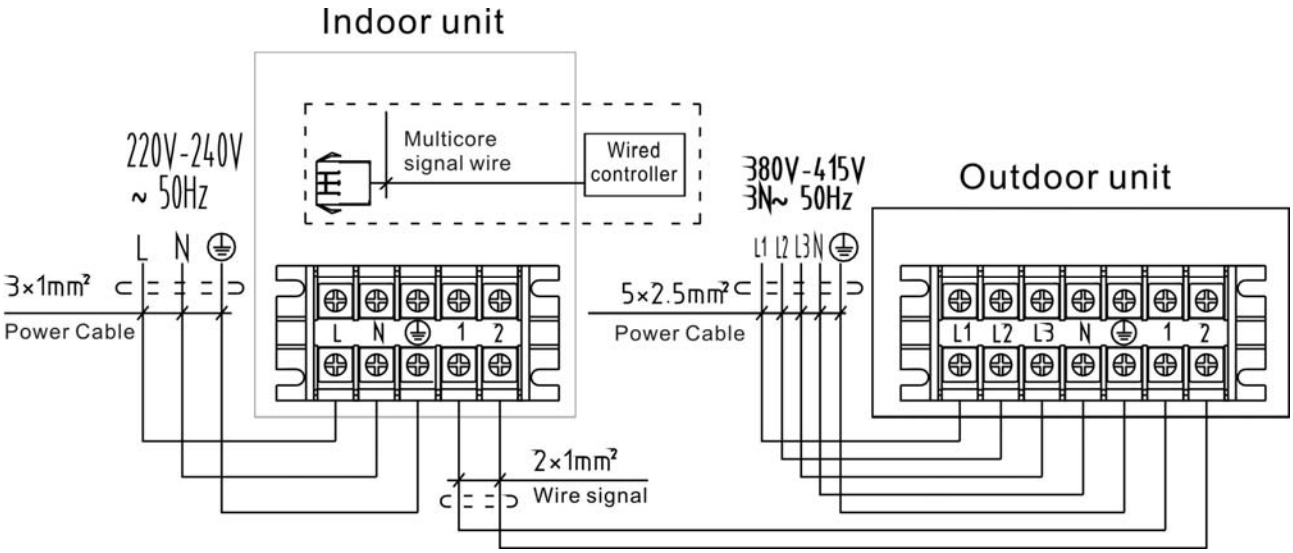

Note: Indoor machine power can also be introduced from the bonnet,which will indoor the L received the outdoor L1, L2, L3 either one,

The zero line of indoor will connected to the corresponding zero line of outdoor,then the group line will connected to the corresponding group line of outdoor,

6. Fan performance

ALHD-C(H)24/4R1

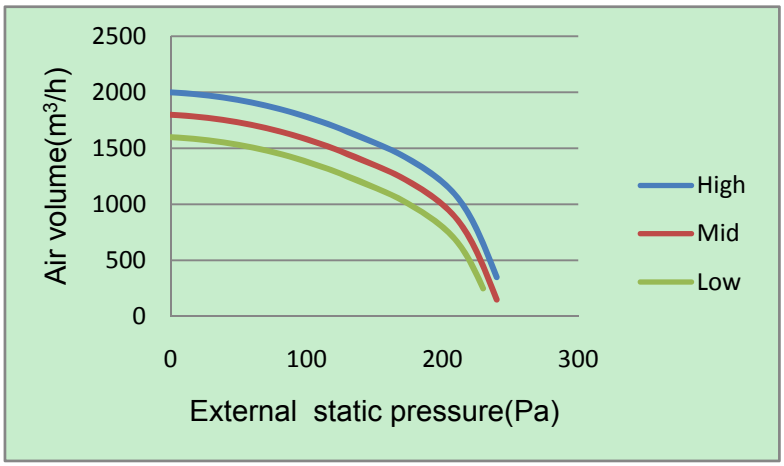

ALHD-C(H)36/5R1

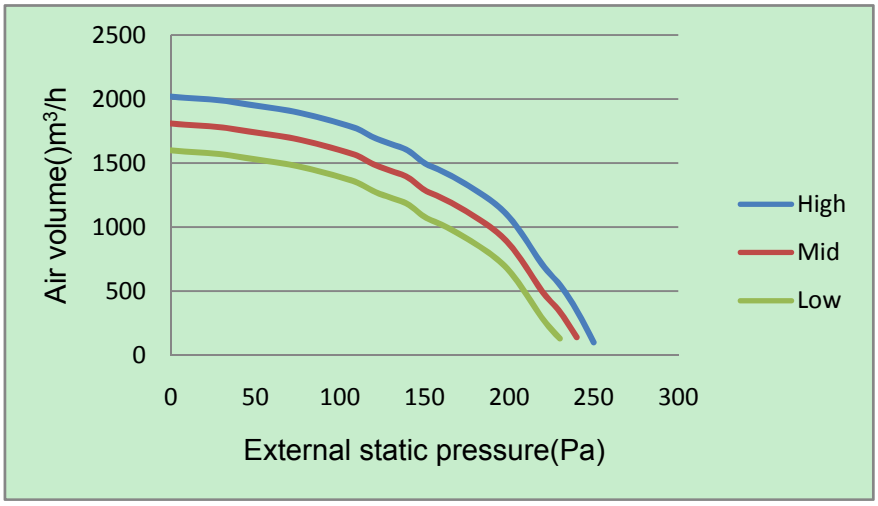

ALHD-C(H)48/5R1, ALHD-C(H)60/5R1

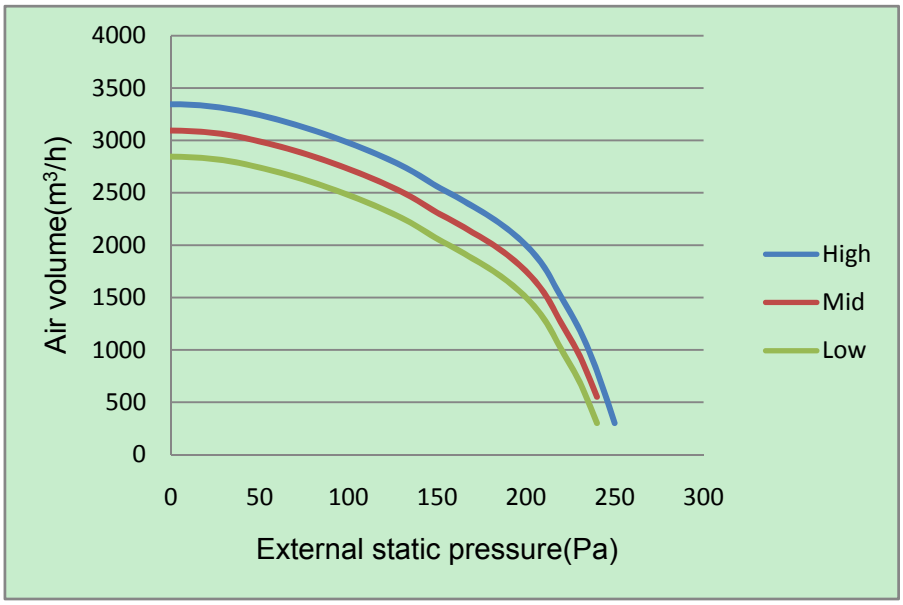

7. Installation

7.1 Preparation and equipments before installation

Please buy following spare parts from your local market before installation	Besides general implements, other implements are needed when connecting the pipe
Hung bolts M12, 4 pcs	Acetylene cylinders, oxygen cylinders (when longer pipe used it should be welded)
Drainage pipe PVC	One set pipe cut machine. (cut copper pipe)
Copper connecting pipe	Refrigerant cans, electronic balance (when longer pipe used additional gas should be charged)
Adhesive belt (big size) 5 pcs, (small size) 5 pcs	Pressure gauges, pipe clamp, welding torch, 2B silver electrode
Heat insulation material used to connect copper pipe (PE foam material, its thickness is more than 8mm)	Wrench 2 pcs, one of them is with adjustable torque wrench (42N.m,65N.m,100N.mm)
Power cable, electrical wire between indoor and outdoor unit (Must be in accordance with the wire diameter in the wiring diagram)	Nitrogen cylinder (in order to prevent oxidation when welding, using Nitrogen to replace the air)

7.2 Indoor unit installation precaution

◇Hanging location should be able to support the unit's weight, there should be no increase in noise and vibration. If the hanging location needs reinforcement, it should be reinforced before installation;

◇Choose the space above the ceiling that can put the indoor unit inside;

◇The location should be easy for drainage;

◇The unit should not be installed in the heat source, steam source, oil mist places (such as machine room, kitchen, laundry room, mechanical workshop, etc.) in order to avoid performance degradation, electric shock, plastic parts corrosion which lead to unit broken;

◇Choose the location at least 1 meter away from TV and radio, in order to avoid interference to them

◇There is no obstacles getting in the way of air circulation, cold air can evenly spread to all corners of the room;

◇In order to facilitate maintenance and repair, there should be certain distance between indoor unit and obstacles;

◇Refrigerant R22 is used for this unit, which is non-flammable and non-toxic gas. As the proportion of refrigerant is bigger than air, so if it leaks the gas will be filled on the ground. Therefore, if the units mounted on a closed room there must be good ventilation to prevent suffocation. In case of leakage of refrigerant, units should immediately stop running, and contact with maintenance personnel in time. There must be no fire at the site, because the refrigerant will turn to harmful gas when get to the fire.

7.3 The distance between indoor unit and obstacle

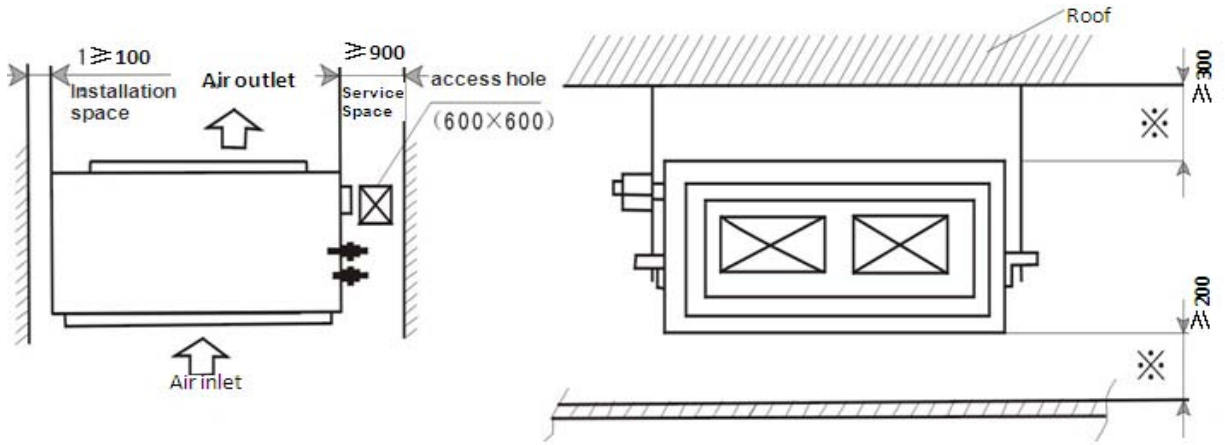

7.4.Indoor unit suspension

◇Select the suspension foundation

The suspension foundation is a structure of either wooden frame orreinforced concrete. It must be firm and reliable to bear at least 4 times weight of itself and capable of bearing vibration for long periods;

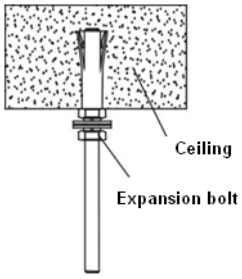

◇Fixing of suspension foundation

Fix the suspension bolts either as shown in the picture or by a steel or wooden bracket;

◇Adjust the relative positions of the suspension hooks to ensure the indoor unit is level in all directions. Use a spirit level to ensure this, otherwise water leakage, air leakage etc. will be resulted;

◇Tighten the nuts and ensure that the hooks are tightly connected to the nuts and shims, and there is no phenomenon of virtual hanging;

◇After the unit is installed ensure it is secure and does not shake or sway.

7.5 Duct pipeline installation

◇Using canvas to connect between indoor unit and duct pipeline, in order to save unnecessary vibration, as to the detail connection method please refer to the following picture.

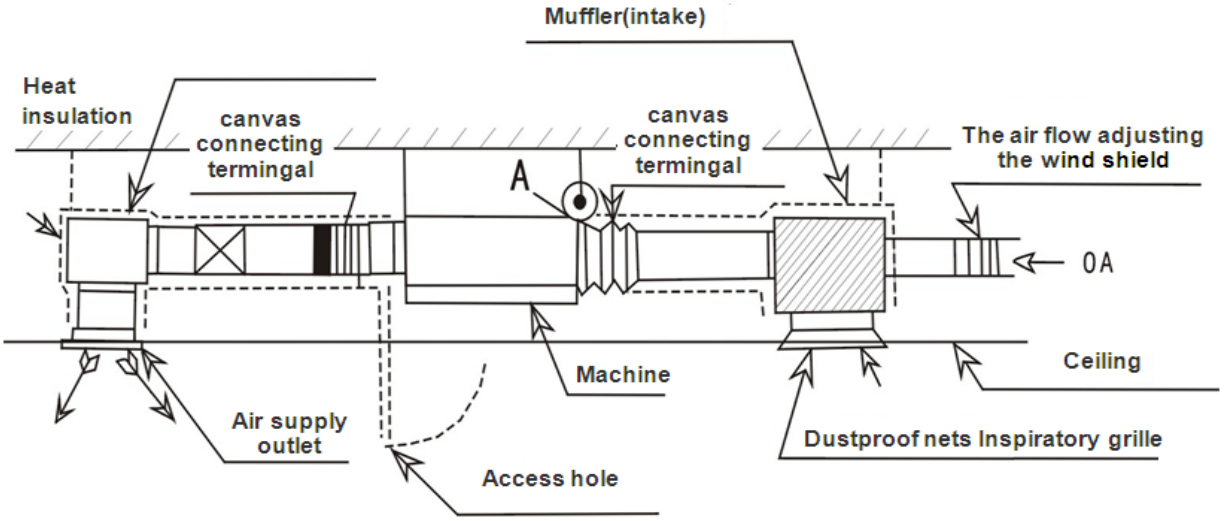

7.6 Drainage pipe installation

◇Drainage pipes must be wrapped with heat insulation materials, otherwise it will cause frost or droplets, see picture as follows:

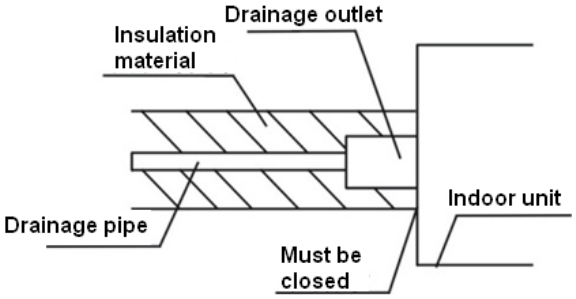

Heat insulation material: rubber insulation pipe with the thickness of more than 8mm

◇Drainage pipe must have a downward gradient (1/50--1/100).If the drain pipe is installed ups and downs, it will cause water backflow or leakage etc.

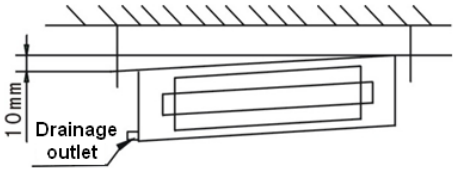

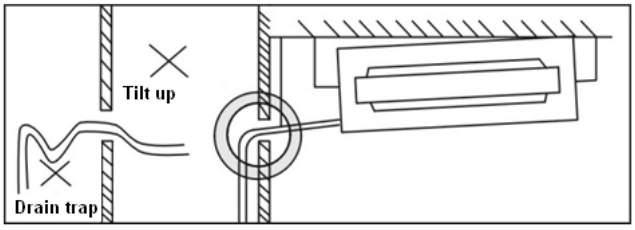

◇When finish installation please carry out the drainage test to ensure that the water flow through the pipeline fluently, and carefully observe the junction to ensure that there is no water leakage at the junction. If the unit is installed in the newly built house, strongly recommend that this test taken before the ceiling installation. Even it is the heating only unit, this test is unavoidable.

7.7 Remote controller receiver installation.

◇Installation site: recommend that the receiver is mounted with the distance of 30~50 cm to the indoor unit air outlet(on your choice as well), while must ensure that the receiver can get the signal that the remote controller sends, please refer to the following installation picture:

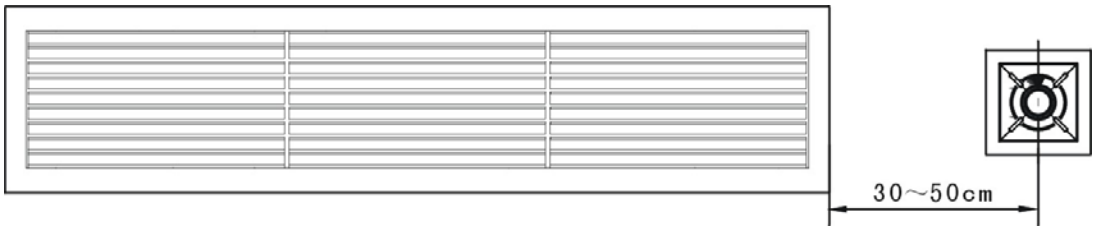

NOTES:

The remote control signal effectively work for straight line from 8 meters, when the battery after the power consumption, effective work will shorten the distance

◇Mounting hole set up: please use certain instrument to dig a square hole with 88x88mm on the ceiling

◇Remote controller receiver installation.

Hold the two sides (with clip sides) of the receiver, set the spring clip in the vertical way then put itinto the mounting hole, if the two sides of the receiver is in the same level with the ceiling the installation is finished.

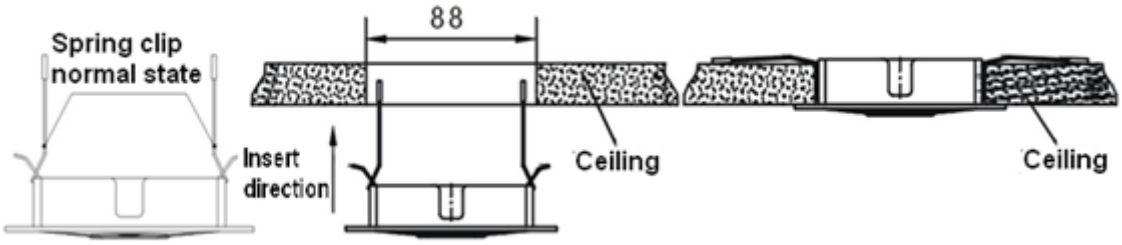

◇Signal line connection: connect the wire of remote controller receiver to the CN-DISP terminal board on PCB of indoor unit wire box then fix it.

8 Explored view

ALHD-C(H)24/4R1, ALHD-C(H)36/5R1

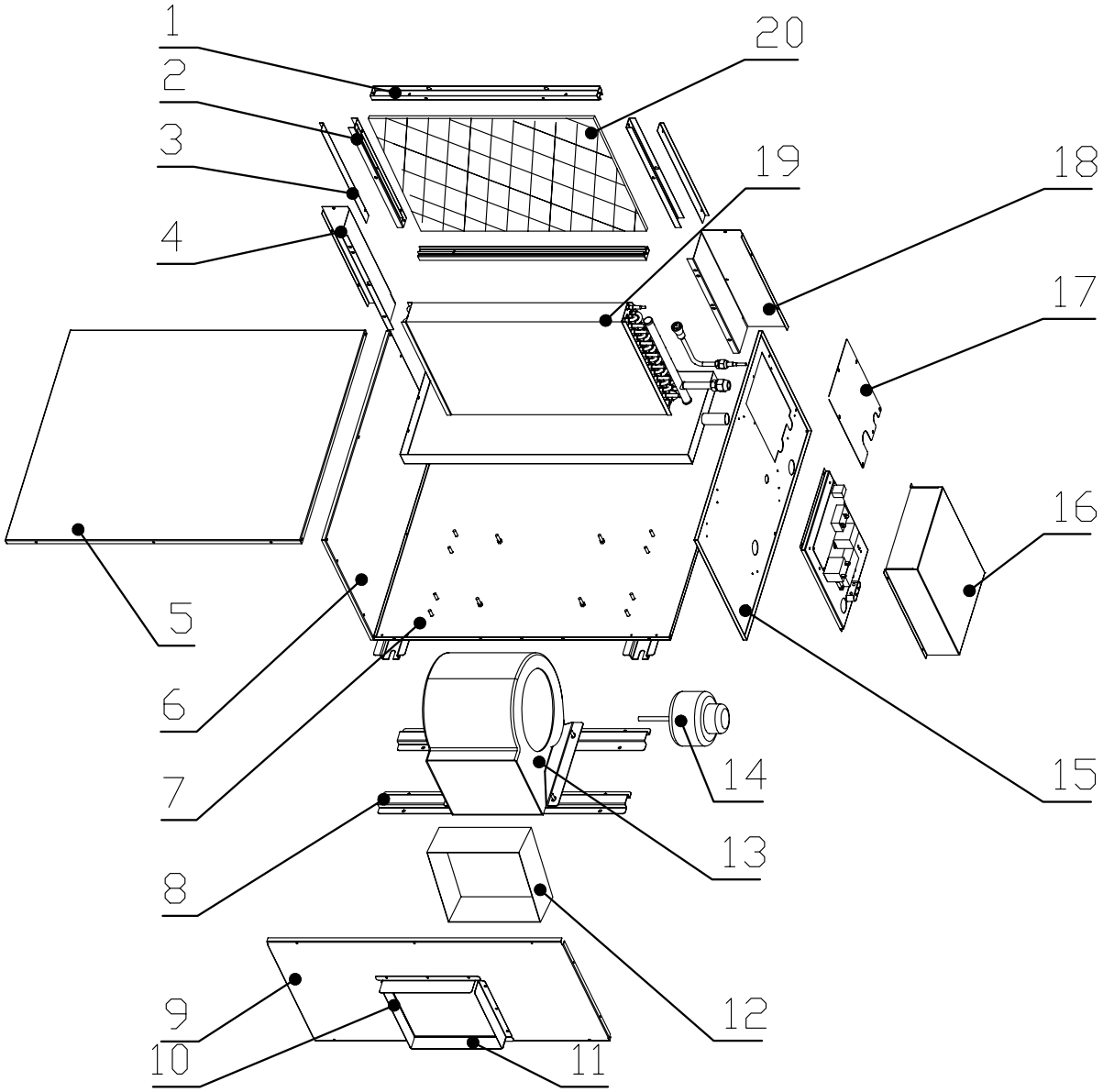

ALHD-C(H)24/4R1 spare parts list

N0.	Chinese name	Part Name	Quantity	Unit
1	滑槽组件1	Sliding channel component 1	2	Sets
1.1	滑槽1	Sliding channel	2	Pcs
1.2	进风框横条	Into wind box stripes	2	Pcs
2	进风框竖条	Into wind box erect bar	2	Pcs
3	空气过滤门	Air filtration door	2	Pcs
4	侧板左连接板	Endplates left linking slab	1	Pc
5	顶盖板	Top cover	1	Pc
6	左侧板	Left board	1	Pc
7	底盘组件	Chassis components	1	Set

7.1	底盘	Chassis	1	Pc
7.2	底脚	Bottom feet	1	Pc
7.3	六角头螺栓(不锈钢)M6*20 GB5783	Hexagon bolts (stainless steel) M6*20 GB5783	8	Pcs
8	风机固定架组件	Fan fixed frame components	2	Set
8.1	风机固定条	Fan stents	2	Pc
8.2	六角头螺栓(不锈钢)M6*20 GB5783	Hexagon bolts (stainless steel) M6*20 GB5783	4	Pcs
9	出风面板	The wind panel	1	Pc
10	出风法兰A	Exhaust flangeA	1	Pc
11	出风法兰B	Exhaust flangeB	1	Pc
12	帆布软接	Canvas soft connect	1	Pc
13	离心风轮组件SYZ7-7 I	Centrifugal rotor components SYZ7-7I	1	Set
14	电机 YDK200-4	Motor YDK200-4	1	Pc
15	右侧板	Right board	1	Pc
16	ALHi-H24B4/B控制器总成	Electric assembly	1	Set
16.1	电控盒盖	Electric control box incautiously	1	Pc
16.2	(ROHS)变压器 TDB-8-B(PTC)	(ROHS) transformer tdb-large - 8 - B (PTC)	1	Pc
16.3	R控制板QRDL-3F-HCE3	R panel QRDL-3F-HCE3	1	Pc
16.4	端子板 7位(600V 4mm2)	Terminal board 5 (600V 4mm2)	1	Pc
16.5	(ROHS)电容 10μF/450V a.c	(ROHS) 10Uf / 450V a.c capacitance	1	Pc
16.6	传感器 5K3470 XH2 0.6m(铜壳)	Sensor 5K3470 XH2 0.6 m (copper shell)	1	Pc
16.7	传感器 5K3470 XH2 1.2m(塑封)	XH2 1.2 m (5K3470 sensor encapsulation)	1	Pc
16.8	电控盒底板	Electric control box floor	1	Pc
17	阀板	disc	1	Pc
18	侧板右连接板	Endplates right linking slab	1	Pc
19	蒸发器总成	Evaporator assembly	1	Set
19.1	蒸发器组件	Evaporator components	1	Set
19.2	蒸发器铜管套件	Evaporator brass suite	1	Set
20	空气过滤器	Air filter	1	Pc

ALHD-C(H)36/5R1,ALHD-C(H)48/5R1 ,ALHD-C(H)60/5R1

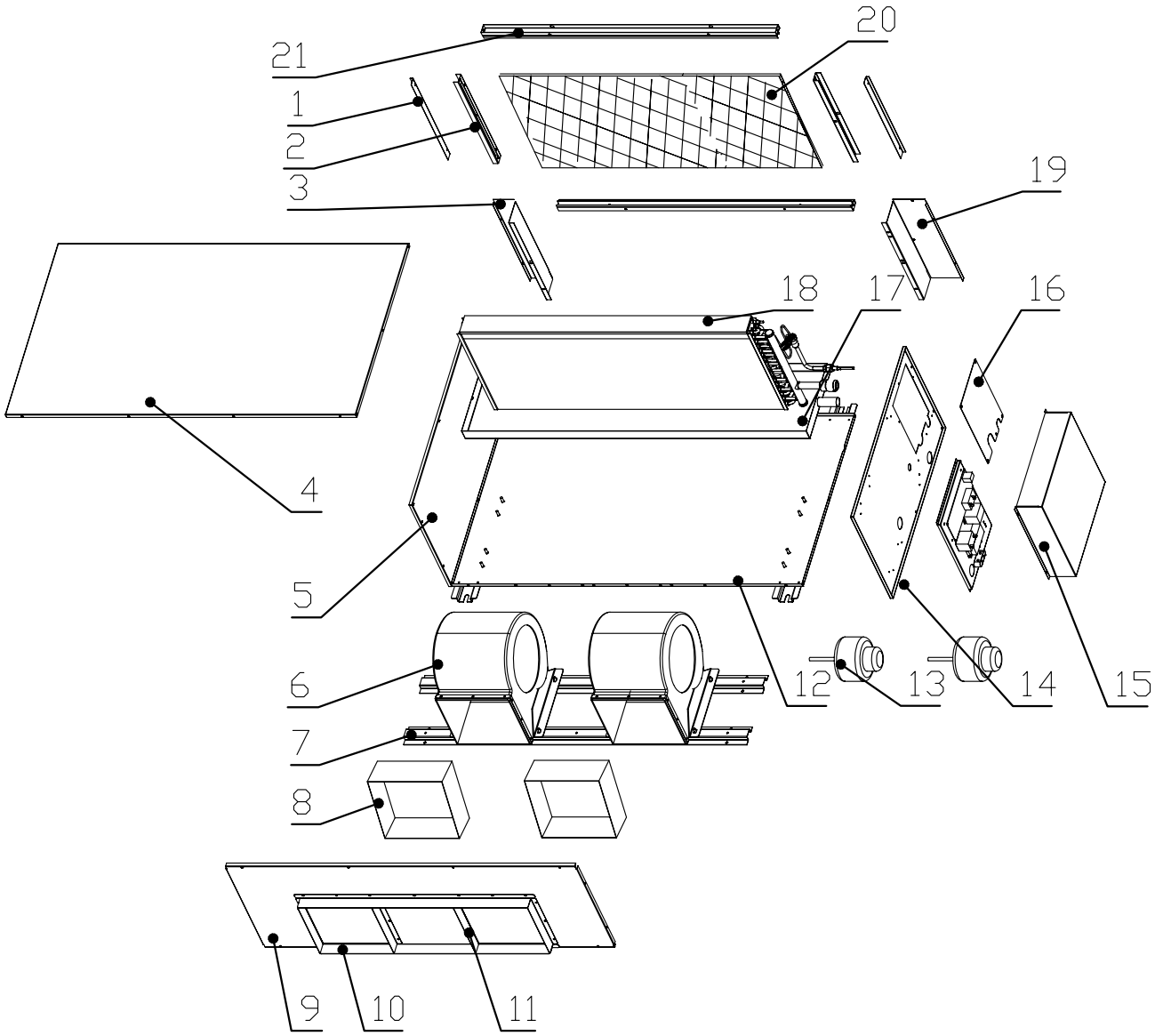

ALHD-C(H)36/5R1 spare parts list

N0.	Chinese name	Part Name	Quantity	Unit
1	空气过滤门1	Air filtration door1	2	Pcs
2	进风框竖条	Into wind box erect bar	2	Pcs
3	侧板左连接板	Endplates left linking slab	1	Pc
4	顶盖板	Top cover	1	Pc
5	左侧板	Left board	1	Pc
6	离心风轮组件SYZ7-7I	Centrifugal rotor components SYZ7-7I	2	Sets
7	风机固定架组件	Fan fixed frame components	2	Sets
7.1	风机固定条	Fan stents	2	Pcs
7.2	六角头螺栓(不锈钢)M6*20 GB5783	Hexagon bolts (stainless steel) M6*20 GB5783	8	Pcs
8	帆布软接	Canvas soft connect	2	Pcs
9	出风面板	The wind panel	1	Pc
10	出风法兰A	Exhaust flange A	2	Pcs

11	出风法兰B	Exhaust flangeB	4	Pcs
12	底盘组件	Chassis components	1	Set
12.1	底脚	Bottom feet	1	Pc
12.2	底盘	Chassis	1	Pc
12.3	六角头螺栓(不锈钢)M6*20 GB5783	Hexagon bolts (stainless steel) M6*20 GB5783	8	Pcs
13	电机 YDK200-4	Motor YDK200-4	2	Pcs
14	右侧板	Right board	1	Pc
15	电控盒总成	Electric control box assembly	1	Set
15.1	电控盒盖	Electric control box incautiously	1	Pc
15.2	电控盒底板	Electric control box floor	1	Pc
15.3	R控制板FGJ(H)-RQD-3F-SYE2	R panel FGJ (H) - RQD - 3F - SYE2	1	Pc
15.4	传感器 5K3470 XH2 0.6m(铜壳)	Sensor 5K3470 XH2 0.6 m (copper shell)	1	Pc
15.5	传感器 5K3470 XH2 1.2m(塑封)	XH2 1.2 m (5K3470 sensor encapsulation)	1	Pc
15.6	端子板 5位(600V 4mm2)IV	Terminal board 5 (600V 4mm2) IV	1	Pc
15.7	(ROHS)电容 10μF/450V a.c	(ROHS) 10Uf / 450V a.c capacitance	2	Pcs
15.8	(ROHS)变压器 TDB-8-B(PTC)	(ROHS) transformer tdb-large - 8 - B (PTC)	2	Pcs
16	阀板	disc	1	Pc
17	接水盘	Wet pan	1	Pc
18	蒸发器总成	Evaporator assembly	1	Set
18.1	蒸发器组件	Evaporator components	1	Set
18.2	蒸发器铜管套件	Evaporator brass suite	1	Set
19	侧板右连接板	Endplates right linking slab	1	Pc
20	空气过滤器	Air filter	1	Pcs
21	滑槽组件1	Sliding channel component 1	2	Set
21.1	滑槽	Sliding channel	2	Pcs
21.2	进风框横条	Into wind box stripes	2	Pcs

ALHD-C(H)48/5R1 ,ALHD-C(H)60/5R1 spare parts list

N0.	Chinese name	Part Name	Quantity	Unit
1	空气过滤门1	Air filtration door1	2	Pcs
2	进风框竖条	Into wind box erect bar	2	Pcs
3	侧板左连接板	Endplates left linking slab	1	Pc
4	顶盖板	Top cover	1	Pc
5	左侧板	Left board	1	Pc
6	离心风轮组件SYZ7-7I	Centrifugal rotor components SYZ7-7I	2	Set
7	风机固定架组件	Fan fixed frame components	2	Set
7.1	风机固定条	Fan stents	2	Pcs
7.2	六角头螺栓(不锈钢)M6*20 GB5783	Hexagon bolts (stainless steel) M6*20 GB5783	8	Pcs
8	帆布软接	Canvas soft connect	2	Pcs
9	出风面板	The wind panel	1	Pc
10	出风法兰A	Exhaust flange A	2	Pcs
11	出风法兰B	Exhaust flangeB	4	Pcs
12	底盘组件	Chassis components	1	Set

12.1	底脚	Bottom feet	2	Pcs
12.2	底盘	Chassis	1	Pc
12.3	六角头螺栓(不锈钢)M6*20 GB5783	Hexagon bolts (stainless steel) M6*20 GB5783	8	Pcs
13	电机 YDK200-4	Motor YDK200-4	2	Pcs
14	右侧板	Right board	1	Pc
15	电控盒总成	Electric control box assembly	1	Set
15.1	电控盒盖	Electric control box incautiously	1	Pc
15.2	电控盒底板	Electric control box floor	1	Pc
15.3	R控制板FGJ(H)-RQD-3F-SYE2	R panel FGJ (H) – RQD – 3F – SYE2	1	Pc
15.4	传感器 5K3470 XH2 0.6m(铜壳)	Sensor 5K3470 XH2 0.6 m (copper shell)	1	Pc
15.5	传感器 5K3470 XH2 1.2m(塑封)	XH2 1.2 m (5K3470 sensor encapsulation)	1	Pc
15.6	端子板 5位(600V 4mm2)IV	Terminal board 5 (600V 4mm2) IV	1	Pc
15.7	(ROHS)电容 10μF/450V a.c	(ROHS) 10Uf / 450V a.c capacitance	2	Pcs
15.8	(ROHS)变压器 TDB-8-B(PTC)	(ROHS) transformer tdb-large - 8 - B (PTC)	2	Pcs
16	阀板	disc	1	Pc
17	接水盘	Wet pan	1	Pc
18	蒸发器总成	Evaporator assembly	1	Set
18.1	蒸发器组件	Evaporator components	1	Set
18.2	蒸发器铜管套件	Evaporator brass suite	1	Set
19	侧板右连接板	Endplates right linking slab	1	Pc
20	空气过滤器	Air filter	1	Pc
21	滑槽组件1	Sliding channel component 1	2	Sets
21.1	滑槽	Sliding channel	2	Pcs
21.2	进风框横条	Into wind box stripes	2	Pcs

Part 3 Universal outdoor unit

1.Specfication 139

2.Capacity Amendment 146

3.Dimension 148

4.System principle diagram 151

5.Electrical wiring and connection.....155

6.Explore View 159

7.Installation.....167

1. Specfication

Model			AL-C12/4R1(U)	AL-H12/4R1(U)	AL-C18/4R1(U)
Factory Model			AL-12A4/R1(T)	AL-H12A4/R1(T)	AL-18A4/R1(T)
Power Supply		V~,Hz, Ph	220~240,50,1	220~240,50,1	220~240,50,1
Max. Input Consumption		W	1750	1750	2650
Max. Current		A	8.0	8.0	12.0
Capacity	Cooling	Btu/h	12000	12000	18000
		kW	3.6	3.6	5.3
	Heating	Btu/h	/	13500	/
		kW	/	3.9	/
Compressor	Model		PA150X2C-4FT	PA150X2C-4FT	PA215X2CS-4KU1
	Type		ROTARY	ROTARY	ROTARY
	Brand		TOSHIBA	TOSHIBA	TOSHIBA
	Capacity	W	3670	3670	5340
	Input	W	1245	1245	1830
	Rated Current(RLA)	A	5.75	5.75	8.55
	Locked Rotor Amp(LRA)	A	29.9	29.9	36.8
	Thermal Protection temp.		UP3RE0596-T56	UP3RE0596-T56	UP3SE0391-T39
	Capacitor	uF	35	35	50
	Refrigerant Oil	ml	480	480	750
OutdoorFan Motor	Model		YDK30-6A	YDK30-6A	YDK65-6B
	code		R60020113800	R60020113800	R60020207200
	Brand		AUX	AUX	AUX
	Output Power x Fan quantity	W	30*1	30*1	65*1
	Capacitor	uF	2.5	2.5	4
	Speed	r/min	770	770	870
Coil	Number Of Row		2	2	2
	Tube Pitch(a)x Row Pitch(b)	mm	20.5×12.7	20.5×12.7	22×19.05
	Fin Pitch	mm	1.6	1.6	1.6
	Fin Material		Hydrophilic aluminum fin		
	Tube Outside Dia.and Material	mm	φ7,Inner grooved	φ7,Inner grooved	φ7.94,Inner grooved
	Coil Length x Height x Width	mm	730×492×25.4	730×492×25.4	760×484×38.1
	Heat Exchanging Area	m^2	10.36	10.36	16.02
Air Flow Volume		CFM	1165	1165	1529
		m^3/h	1980	1980	2600
Noise Level		dB(A)	53	53	55
Dimension(W×D×	Net	mm	760×260×540	760×260×540	800×300×590

H)	Packing	mm	880×350×610	880×350×610	930×410×660
Weight	Net	kg	31	32	35
	Gross	kg	34	35	39
Refrigerant Type/Quantity	Type		R410A	R410A	R410A
	Charged Volume	g	1160	1160	1360
Design Pressure		MPa	4.15	4.15	4.15
Refrigerant Piping	Liquid Side	mm	6.35	6.35	6.35
	Gas Side	mm	12.7	12.7	12.7
	Max. Length	m	15	15	20
	Max. Height	m	10	10	15
Operation Temperature Range		℃	16~32	16~32	16~32
Ambient Temperature Range(Cooling/Heating)		℃	-5~49	-5~49/-15~24	-5~49
Application Area		m^2	13-21	13-21	21-35
Connection Wiring	Power Wiring(Indoor)	mm^2	3×1.5mm^2	3×1.5mm^2	3×2.5mm^2
	Power Wiring(Outdoor)	mm^2	/	/	/
	Signal Wiring	mm^2	3×1.5mm^2+1mm^2	3×1.5mm^2+2×1mm^2	3×2.5mm^2+1mm^2
Stuffing Quantity	20/40/40H	Unit	61/132/167	61/132/167	54/112/135

Notes:

1. Nominal cooling capacities are based on the following conditions: Return air temp.: 27℃DB, 19℃WB, and outdoor temp.: 35℃DB, 24℃℃WB;
2. Nominal heating capacities are based on the following conditions: Return air temp.: 20℃DB, and outdoor temp.: 7℃DB, 6℃℃WB;
3. Parameters above are all measured when the connecting pipe is 5 meters.

Model			AL-H18/4R1(U)	AL-C24/4R1(U)	AL-H24/4R1(U)
Factory Model			AL-H18A4/R1(T)	AL-24B4/R1(T)	AL-H24B4/R1(T)
Power Supply		V~,Hz,Ph	220~240,50,1	220~240,50,1	220~240,50,1
Max. Input Consumption		W	2650	3200	3200
Max. Current		A	12.0	14.5	14.5
Capacity	Cooling	Btu/h	18000	24000	24000
		kW	5.3	7.2	7.2
	Heating	Btu/h	20000	/	27500
		kW	5.8	/	8.1
Compressor	Model		PA215X2CS-4KU1	PA290X3CS-4MUI	PA290X3CS-4MUI
	Type		ROTARY	ROTARY	ROTARY
	Brand		TOSHIBA	TOSHIBA	TOSHIBA
	Capacity	W	5340	7180	7180
	Input	W	1830	2430	2430
	Rated Current(RLA)	A	8.55	11.4	11.4
	Locked Rotor Amp(LRA)	A	36.8	61	61

	Thermal Protection temp.		UP3SE0391-T39	UP14SE5145	UP14SE5145
	Capacitor	uF	50	50	50
	Refrigerant Oil	ml	750	950	950
OutdoorFan Motor	Model		YDK65-6B	YDK68-6A	YDK68-6A
	code		R60020207200	R60020209700	R60020209700
	Brand		AUX	AUX	AUX
	Output Power x Fan quantity	W	65*1	68*1	68*1
	Capacitor	uF	4	4	4
	Speed	r/min	870	830	830
Coil	Number Of Row		2	2	2
	Tube Pitch(a)x Row Pitch(b)	mm	22×19.05	22×19.05	22×19.05
	Fin Pitch	mm	1.6	1.5	1.5
	Fin Material		Hydrophilic aluminum fin		
	Tube Outside Dia.and Material	mm	φ7.94,Inner grooved	φ7.94,Inner grooved	φ7.94,Inner grooved
	Coil Length x Height x Width	mm	760×484×38.1	776×660×38.1	776×660×38.1
	Heat Exchanging Area	m2	16.02	23.71	23.71
Air Flow Volume		CFM	1529	1641	1641
		m^3/h	2600	2790	2790
Noise Level		dB(A)	55	60	60
Dimension(W×D×H)	Net	mm	800×300×590	800×300×690	800×300×690
	Packing	mm	930×410×660	930×410×760	930×410×760
Weight	Net	kg	36	48	49
	Gross	kg	40	52	53
Refrigerant Type/Quantity	Type		R410A	R410A	R410A
	Charged Volume	g	1360	2360	2360
Design Pressure		MPa	4.15	4.15	4.15
Refrigerant Piping	Liquid Side	mm	6.35	9.52	9.52
	Gas Side	mm	12.7	15.88	15.88
	Max. Length	m	20	30	30
	Max. Height	m	15	15	15
Operation Temperature Range		℃	16~32	16~32	16~32
Ambient Temperature Range(Cooling/Heating)		℃	-5~49/-15~24	-5~49	-5~49/-15~24
Application Area		m^2	21-35	28-47	28-47
Connection Wiring	Power Wiring(Indoor)	mm^2	$3×2.5mm^2$	/	/
	Power Wiring(Outdoor)	mm^2	/	$3×4mm^2$	$3×4mm^2$
	Signal Wiring	mm^2	$3×2.5mm^2+2×1mm^2$	$3×1mm^2+2×1mm^2$	$3×1mm^2+3×1mm^2$
Stuffing Quantity	20/40/40H	Unit	54/112/135	34/72/87	34/72/87

Notes:

1. Nominal cooling capacities are based on the following conditions: Return air temp.: 27℃DB, 19℃WB, and outdoor temp.: 35℃DB, 24℃℃WB;
2. Nominal heating capacities are based on the following conditions: Return air temp.: 20℃DB, and outdoor temp.: 7℃DB, 6℃℃WB;
3. Parameters above are all measured when the connecting pipe is 5 meters.

Model			AL-C36/5R1(U)	AL-H36/5R1(U)	AL-C48/5R1(U)
Factory Model			AL-36A5/R1(T)	AL-H36A5/R1(T)	AL-48A5/R1(T)
Power Supply		V~,Hz,Ph	380~415,50,3	380~415,50,3	380~415,50,3
Max. Input Consumption		W	5100	5100	6100
Max. Current		A	12.0	12.0	16.1
Capacity	Cooling	Btu/h	36000	36000	48000
		kW	10.6	10.6	14.0
	Heating	Btu/h	/	40000	/
		kW	/	11.7	/
Compressor	Model		C-SBP130H38A	C-SBP130H38A	C-SBP170H38A
	Type		SCROLL	SCROLL	SCROLL
	Brand		SANYO	SANYO	SANYO
	Capacity	W	10900	10900	14100
	Input	W	3750	3750	4750
	Rated Current(RLA)	A	6.8	6.8	8.68
	Locked Rotor Amp(LRA)	A	66	66	63
	Thermal Protection temp.		UP18	UP18	UP18
	Capacitor	uF	/	/	/
	Refrigerant Oil	ml	1700	1700	1700
OutdoorFan Motor	Model		YDK150-6C-420	YDK150-6C-420	YDK68-6-359
	code		R60020114400	R60020114400	R60020200600
	Brand		WEITELI	WEITELI	WEITELI
	Output Power x Fan quantity	W	150*1	150*1	68*2
	Capacitor	uF	6	6	3*2
	Speed	r/min	820	820	860
Coil	Number Of Row		2	2	2
	Tube Pitch(a)x Row Pitch(b)	mm	22×19.05	22×19.05	22×19.05
	Fin Pitch	mm	1.6	1.6	1.6
	Fin Material		Hydrophilic aluminum fin		
	Tube Outside Dia.and Material	mm	φ7.94,Inner grooved	φ7.94,Inner grooved	φ7.94,Inner grooved
	Coil Length x Height x Width	mm	889×814×38.1	889×814×38.1	750×1188×38.1
	Heat Exchanging Area	m2	30.66	30.66	38.85

Air Flow Volume		CFM	1876	1876	3059
		m^3/h	3190	3190	5200
Noise Level		dB(A)	60	60	62
Dimension(W×D×H)	Net	mm	903×354×857	903×354×857	945×340×1255
	Packing	mm	1030×410×980	1030×410×980	1090×430×1370
Weight	Net	kg	88	90	92
	Gross	kg	96	98	106
Refrigerant Type/Quantity	Type		R410A	R410A	R410A
	Charged Volume	g	2830	2830	2890
Design Pressure		MPa	4.15	4.15	4.15
Refrigerant Piping	Liquid Side	mm	9.52	9.52	9.52
	Gas Side	mm	15.88	15.88	19.05
	Max. Length	m	50	50	50
	Max. Height	m	30	30	30
Operation Temperature Range		℃	16~32	16~32	16~32
Ambient Temperature Range(Cooling/Heating)		℃	-5~49	-5~49/-15~24	-5~49
Application Area		m^2	42-70	42-70	56-93
Connection Wiring	Power Wiring(Indoor)	mm^2	$3×1mm^2$	$3×1mm^2$	$3×1mm^2$
	Power Wiring(Outdoor)	mm^2	$5×2.5mm^2$	$5×2.5mm^2$	$5×2.5mm^2$
	Signal Wiring	mm^2	$2×1mm^2$	$2×1mm^2$	$2×1mm^2$
Stuffing Quantity	20/40/40H	Unit	30/64/77	30/64/77	20/42/44

Notes:

1. Nominal cooling capacities are based on the following conditions: Return air temp.: 27℃DB, 19℃WB, and outdoor temp.: 35℃DB, 24℃℃WB;
2. Nominal heating capacities are based on the following conditions: Return air temp.: 20℃DB, and outdoor temp.: 7℃DB, 6℃℃WB;
3. Parameters above are all measured when the connecting pipe is 5 meters.

Model			AL-H48/5R1(U)	AL-C60/5R1(U)	AL-H60/5R1(U)
Factory Model			AL-H48A5/R1(T)	AL-60A5/R1(T)	AL-H60A5/R1(T)
Power Supply		V~,Hz,Ph	380~415,50,3	380~415,50,3	380~415,50,3
Max. Input Consumption		W	6100	7800	7800
Max. Current		A	16.1	20.5	20.5
Capacity	Cooling	Btu/h	48000	60000	60000
		kW	14.0	17.6	17.6
	Heating	Btu/h	53000	/	63500
		kW	15.5	/	18.5
Compressor	Model		C-SBP170H38A	JT170G-P8Y1	JT170G-P8Y1
	Type		SCROLL	SCROLL	SCROLL
	Brand		SANYO	DAIKIN	DAIKIN
	Capacity	W	14100	15900	15900
	Input	W	4750	4500	4500

	Rated Current(RLA)	A	8.68	8.9	8.9
	Locked Rotor Amp(LRA)	A	63	59.4	59.4
	Thermal Protection temp.		UP18	UP18WA162-46G	UP18WA162-46G
	Capacitor	uF	/	/	/
	Refrigerant Oil	ml	1700	1500	1500
OutdoorFan Motor	Model		YDK68-6-359	YDK68-6-359	YDK68-6-359
	code		R60020200600	R60020200600	R60020200600
	Brand		WEITELI	WEITELI	WEITELI
	Output Power x Fan quantity	W	68*2	68*2	68*2
	Capacitor	uF	3*2	3*2	3*2
	Speed	r/min	860	860	860
Coil	Number Of Row		2	2	2
	Tube Pitch(a)x Row Pitch(b)	mm	22×19.05	22×19.05	22×19.05
	Fin Pitch	mm	1.6	1.6	1.6
	Fin Material		Hydrophilic aluminum fin		
	Tube Outside Dia.and Material	mm	φ7.94,Inner grooved	φ7.94,Inner grooved	φ7.94,Inner grooved
	Coil Length x Height x Width	mm	750×1188×38.1	750×1188×38.1	750×1188×38.1
	Heat Exchanging Area	m2	38.85	38.85	38.85
Air Flow Volume		CFM	3059	3059	3059
		m^3/h	5200	5200	5200
Noise Level		dB(A)	62	62	62
Dimension(W×D×H)	Net	mm	945×340×1255	945×340×1255	945×340×1255
	Packing	mm	1090×430×1370	1090×430×1370	1090×430×1370
Weight	Net	kg	106	94	101
	Gross	kg	114	108	115
Refrigerant Type/Quantity	Type		R410A	R410A	R410A
	Charged Volume	g	2890	3310	3310
Design Pressure		MPa	4.15	4.15	4.15
Refrigerant Piping	Liquid Side	mm	9.52	9.52	9.52
	Gas Side	mm	19.05	19.05	19.05
	Max. Length	m	50	50	50
	Max. Height	m	30	30	30
Operation Temperature Range		℃	16~32	16~32	16~32
Ambient Temperature Range(Cooling/Heating)		℃	-5~49/-15~24	-5~49	-5~49/-15~24
Application Area		m^2	56-93	64-107	64-107
Connection Wiring	Power Wiring(Indoor)	mm^2	$3×1mm^2$	$3×1mm^2$	$3×1mm^2$
	Power Wiring(Outdoor)	mm^2	$5×2.5mm^2$	$5×2.5mm^2$	$5×2.5mm^2$
	Signal Wiring	mm^2	$2×1mm^2$	$2×1mm^2$	$2×1mm^2$
Stuffing Quantity	20/40/40H	Unit	20/42/44	20/42/44	20/42/44

Notes:

1. Nominal cooling capacities are based on the following conditions: Return air temp.: 27℃DB, 19℃WB, and outdoor temp.: 35℃DB, 24℃℃WB;
2. Nominal heating capacities are based on the following conditions: Return air temp.: 20℃DB, and outdoor temp.: 7℃DB, 6℃℃WB;
3. Parameters above are all measured when the connecting pipe is 5 meters.

2 Capacity Amendment

2.1 Running range

Cooling capacity (Btu/h)		12000	18000	24000	36000	48000	60000
Power supply		220-240V~/50Hz			380-415V 3N~/50Hz		
Voltage		187~242V			320~420V		
A mbien temperature	Cooling	-5~49℃					
	Heating	-15~24℃					

2.2 Amendment coefficient of cooling capacity under different indoor/outdoor DB and WB temperature

Indoor air inlet temperature℃		Outdoor air inlet DB temperature℃				
DB	WB	25	30	35	40	43
23	16	0.98	0.94	0.89	0.85	0.82
25	18	1.05	1	0.95	0.90	0.87
27	19	1.1	1.05	1	0.95	0.91
28	20	1.12	1.07	1.02	0.96	0.93
30	22	1.19	1.13	1.08	1.02	0.99
32	24	1.26	1.20	1.15	1.08	1.05

Actual cooling capacity calculation:

Actual cooling capacity=amendment coefficient of cooling capacity × nominal cooling capacity

——nominal cooling capacity could be found from the performance parameters list

——amendment coefficient of cooling capacity could be found from table above.

2.3 Amendment coefficient of heating capacity under different indoor/outdoor DB and WB temperature

Indoor air inlet DB temperature ℃	Outdoor air inlet WB temperature ℃				
	-5	0	6	10	15
16	0.65	0.80	1.02	1.13	-
18	0.61	0.76	1.02	1.12	-
20	0.6	0.75	1	1.11	1.25
21	0.59	0.72	0.99	1.1	1.24
22	0.58	0.71	0.97	1.09	1.23
24	0.56	0.7	0.96	1.08	1.22

Actual heating capacity calculation:

Actual heating capacity=amendment coefficient of heating capacity × nominal heating capacity

——nominal heating capacity could be found from the performance parameters list

——amendment coefficient of heating capacity could be found from table above.

2.4 Amendment coefficients of heating and cooling capacity under different height drop

Different Cooling Capacity modified coefficients at different height:

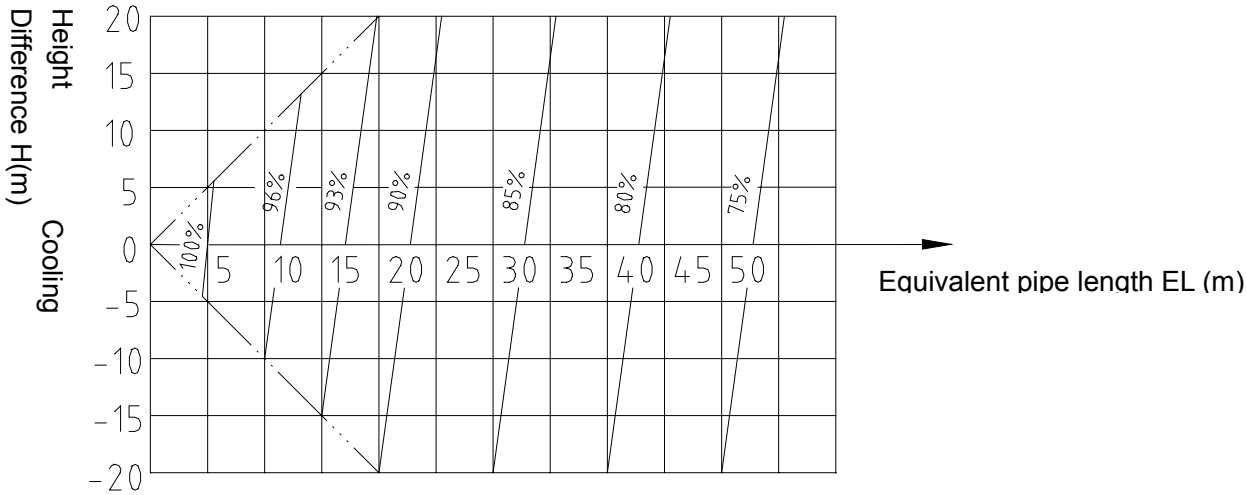

Note: H = Height of Outdoor Unit — Height of Indoor Unit

2.5 Different Heating Capacity modified coefficients at different height:

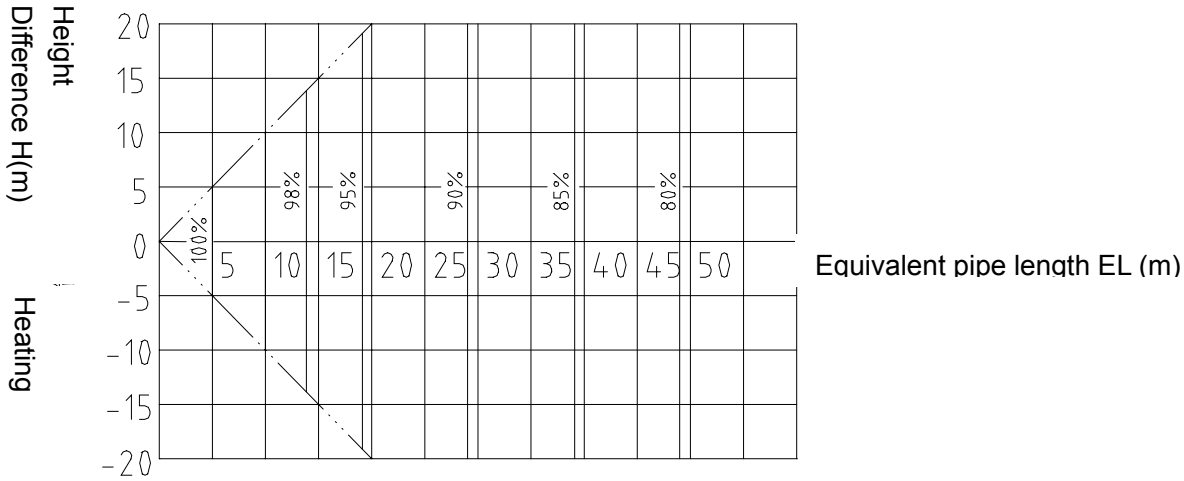

Note: H = Height of Outdoor Unit — Height of Indoor Unit

3. Dimension

AL–C(H)12/4R1(U)

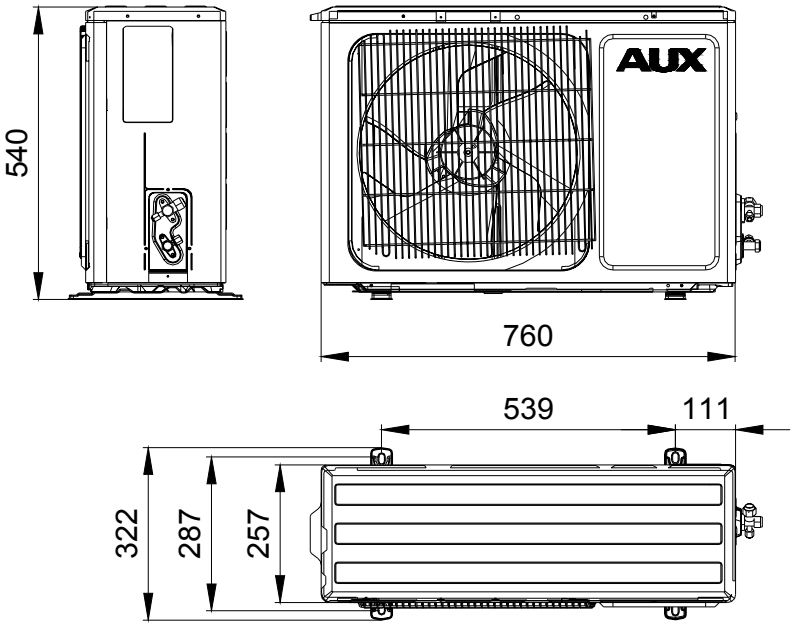

AL-C(H)18/4R1(U)

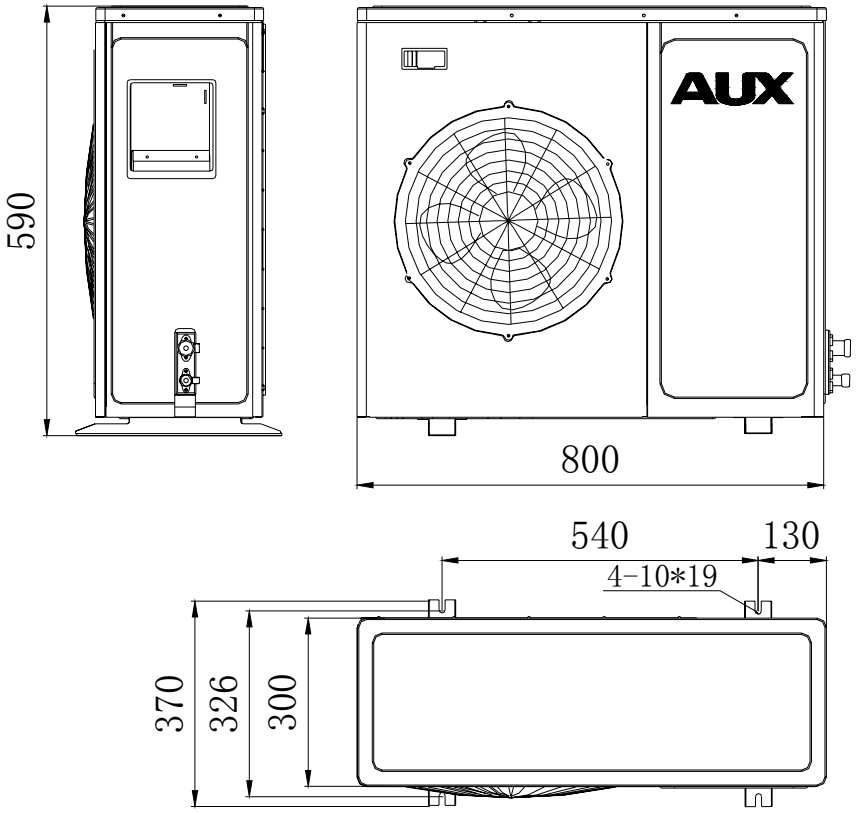

AL-C(H)24/4R1(U)

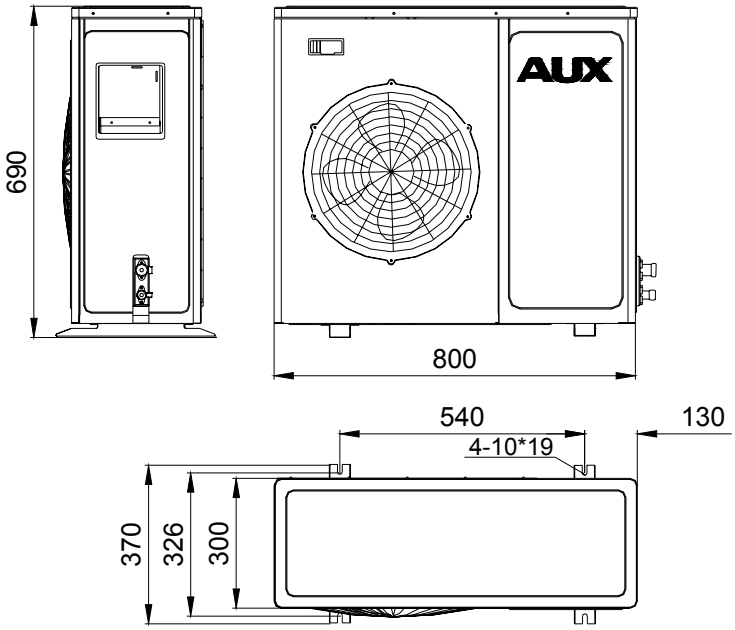

AL-C(H)36/5R1(U)

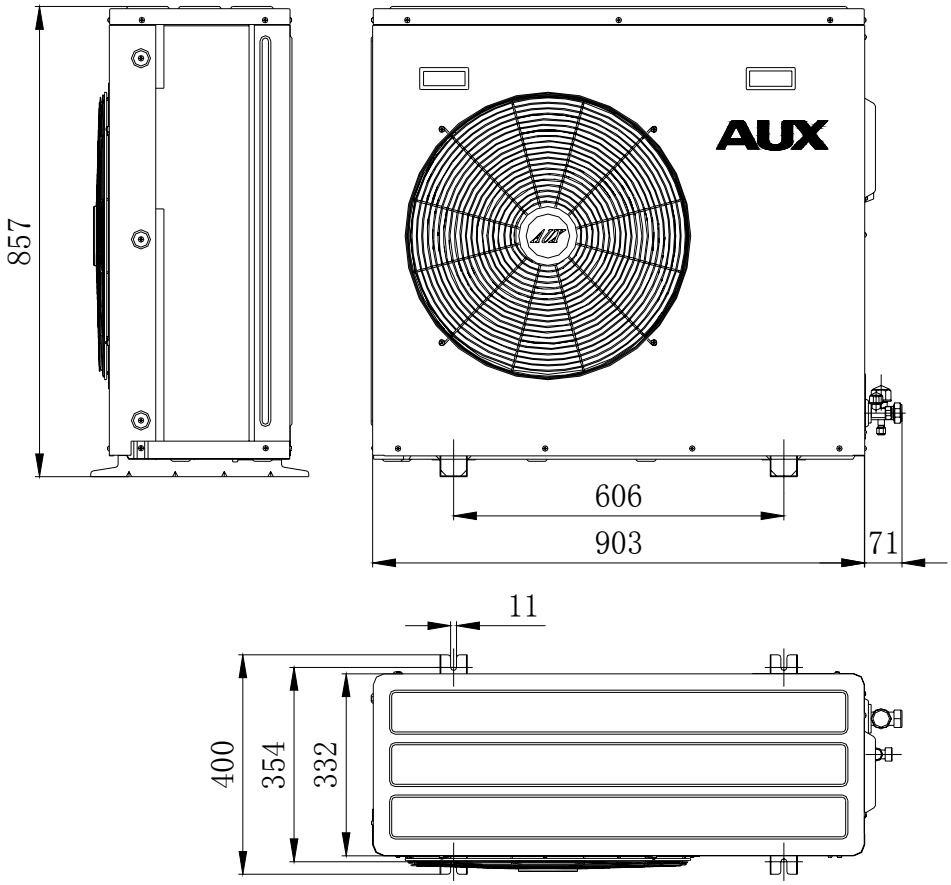

AL-C(48)/5R1(U), AL-C(H)60/5R1(U)

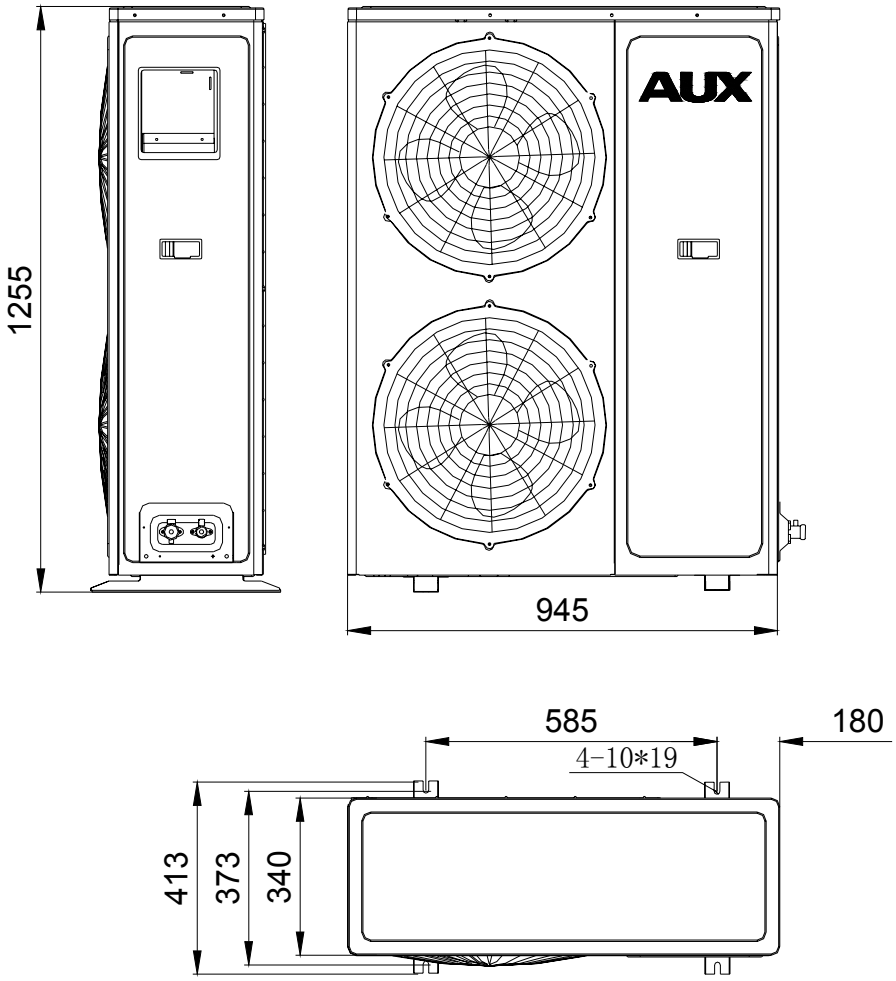

4.System principle diagram

Cooling circle:

the Compressor inhales the low-temperature and low-pressure refrigerant vapor from the evaporator, and vapor be turned into high-temperature and high-pressure gas then enters into condenser, the high-temperature and high-pressure refrigerant gas and outdoor air make heat exchange in the condenser, the compressed vapor is then cooled by heat exchange with the outside air, so that the vapor condenses to be a high-temperature and high-pressure fluid, and then through capillary throttling to cooled, low pressure, then the liquid enters into the evaporator and two-phase of gas and liquid refrigerant in the evaporator completely evaporate, thereby cooling the indoor air; from evaporator the vapor is inhaled into compressor again, so it runs continuously cycle to cycle, cooled air is continuous supplied to the air-conditioned area though Duct by fan motor.

Heating cycle:

It is the contrary cycle of cooling cycle, at this moment the 4-way valve changes direction, and make refrigerant flow to direction changer, that is, the vapor discharged from the compressor enters into the indoor heat exchanger to condense, the condensation of refrigerant after the capillary expenditure, evaporates in the outdoor heat exchanger, and then inhaled by the compressor after evaporation, so it runs continuously periodically , the heated air is continuous supplied to the air-conditioned area though duct by fan motor.

AL–H12/4R1(U), AL–H18/4R1(U)

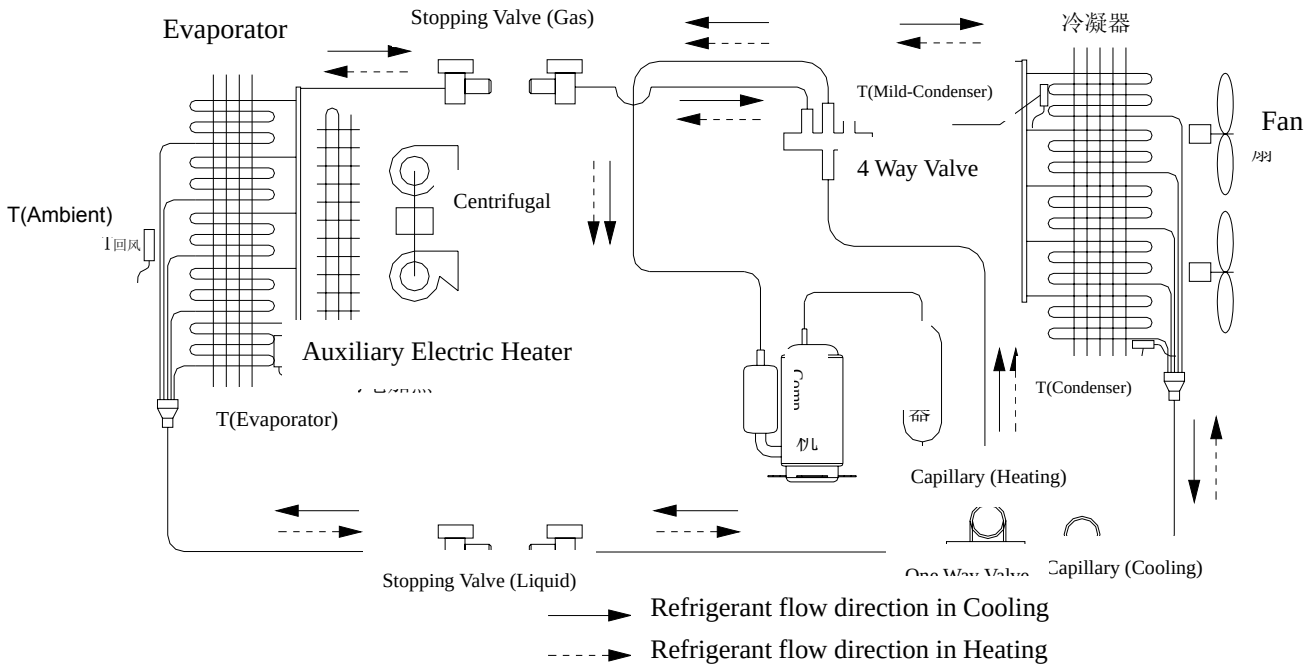

AL–C12/4R1(U), AL–C18/4R1(U)

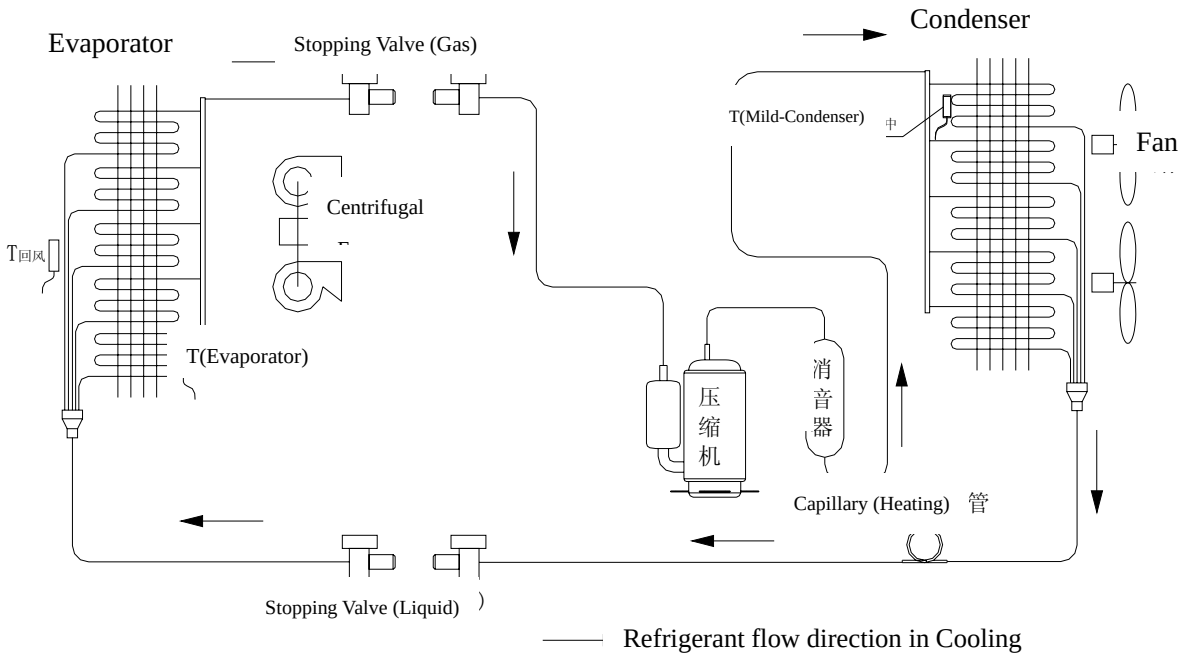

AL–H24/4R1(U)

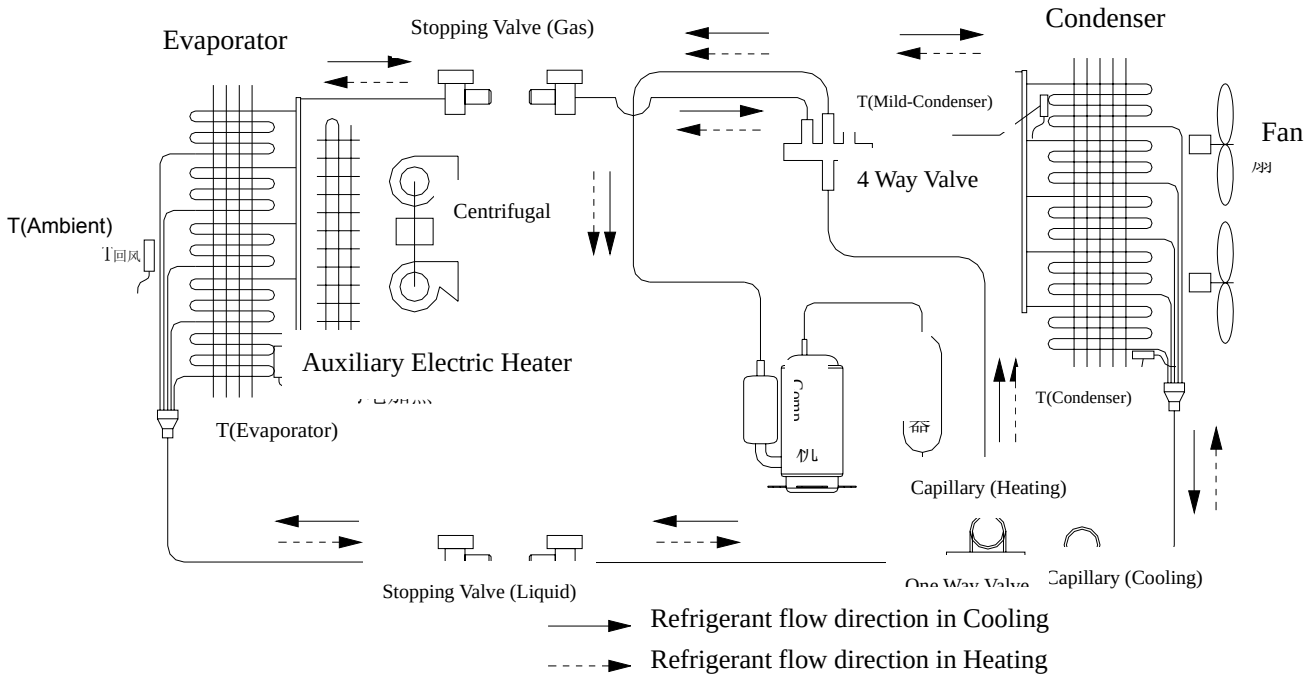

AL–C24/4R1(U)

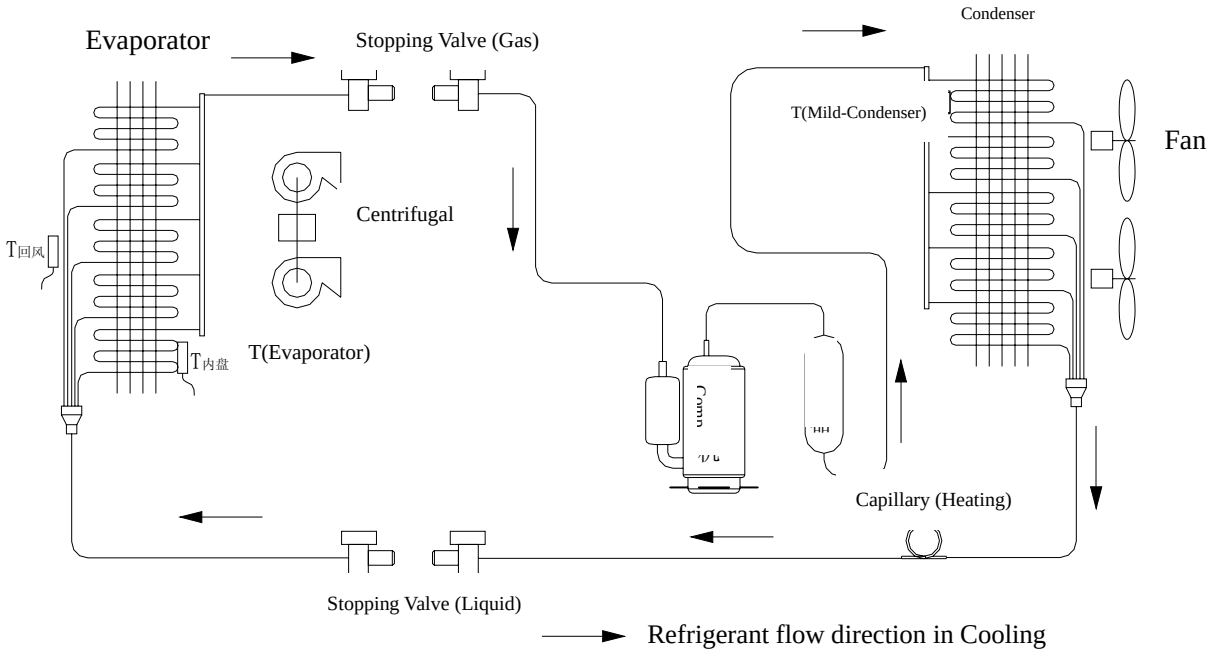

AL–H36/5R1(U), AL–H48/5R1(U), AL–H60/5R1(U),

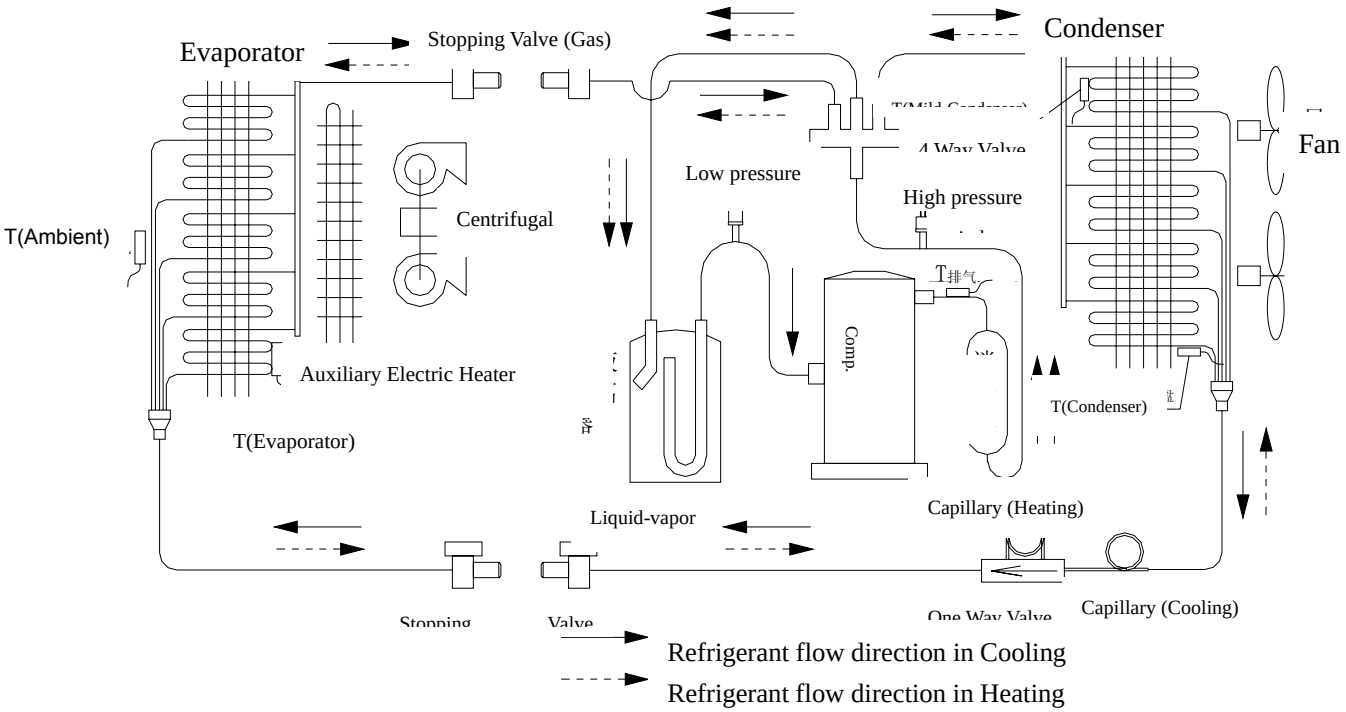

AL–C36/5R1(U), AL–C48/5R1(U), AL–C60/5R1(U),

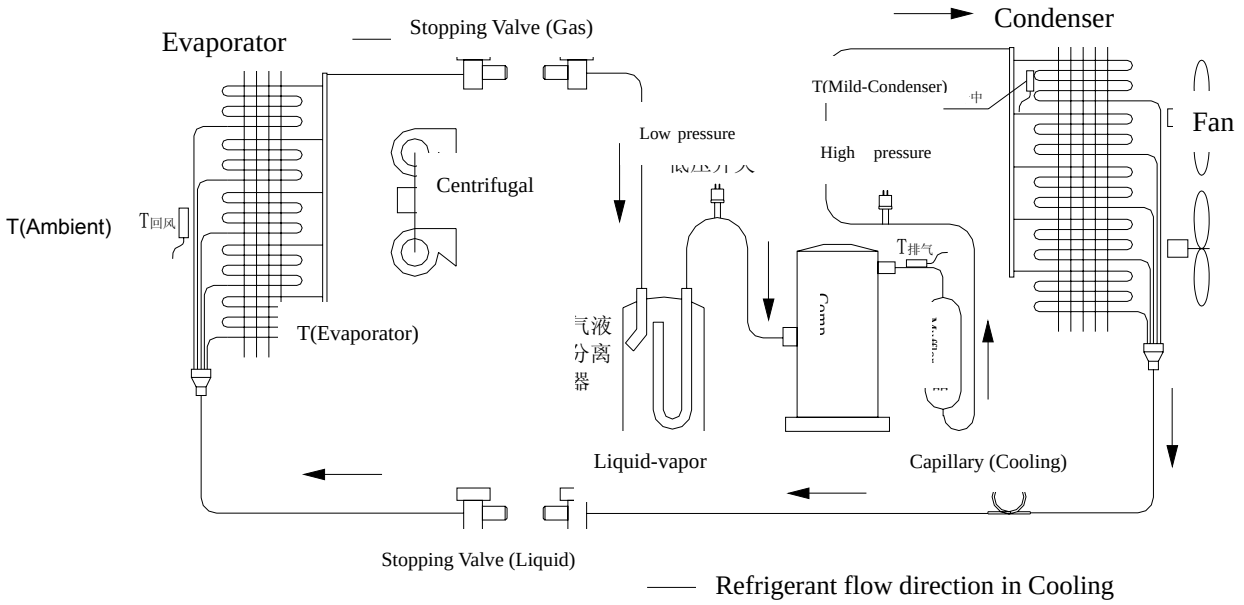

5.Electrical wiring and connection

AL-H12/4R1(U), AL-H18/4R1(U)

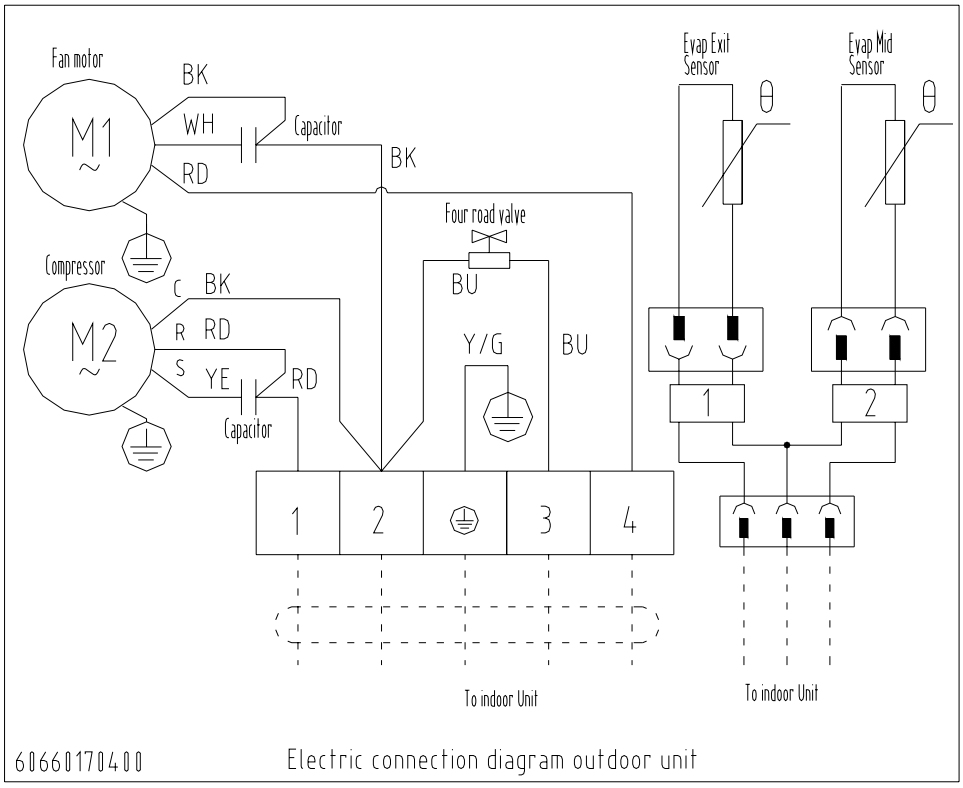

AL-C12/4R1(U), AL-C18/4R1(U)

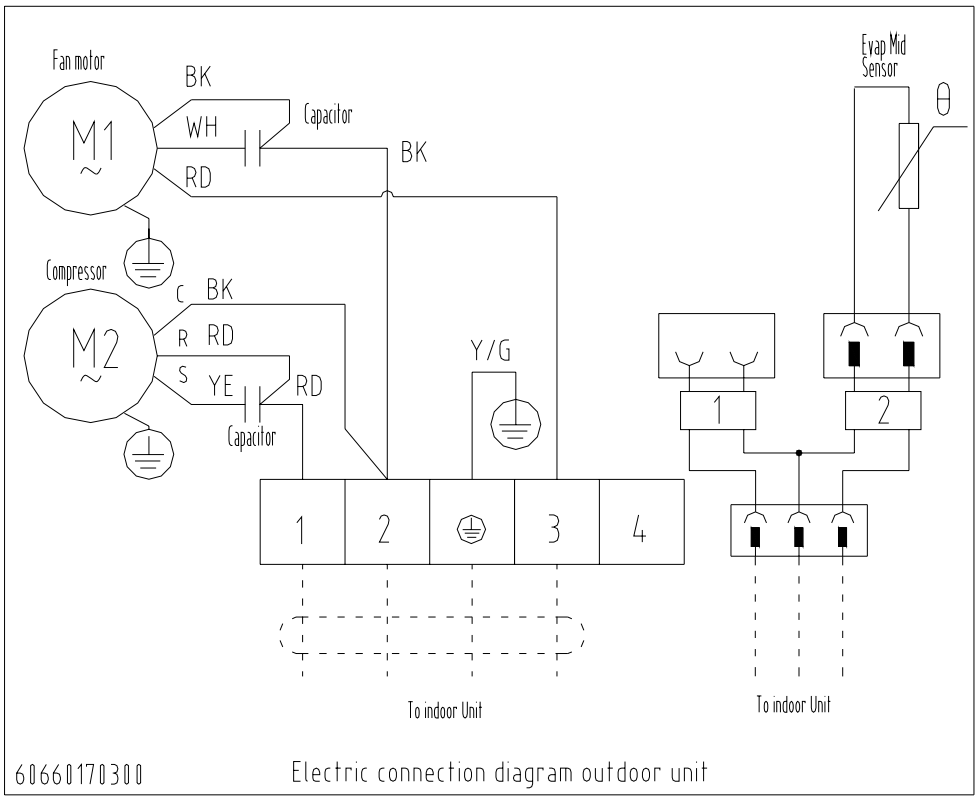

AL-H24/4R1(U)

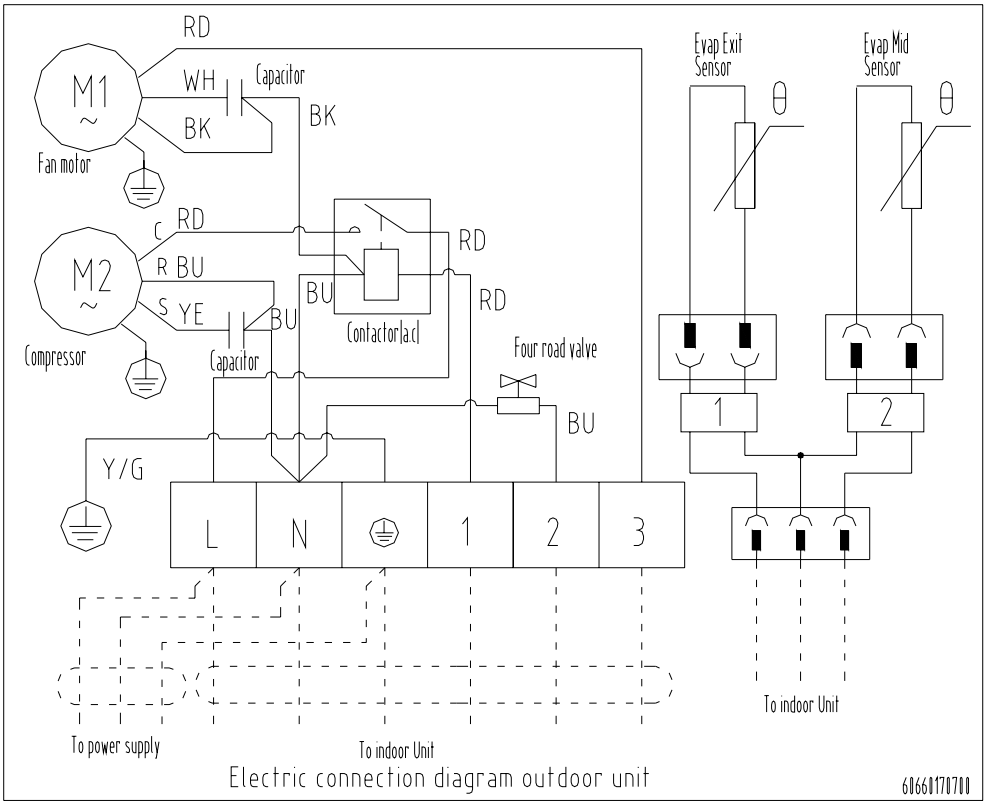

AL-C24/4R1(U)

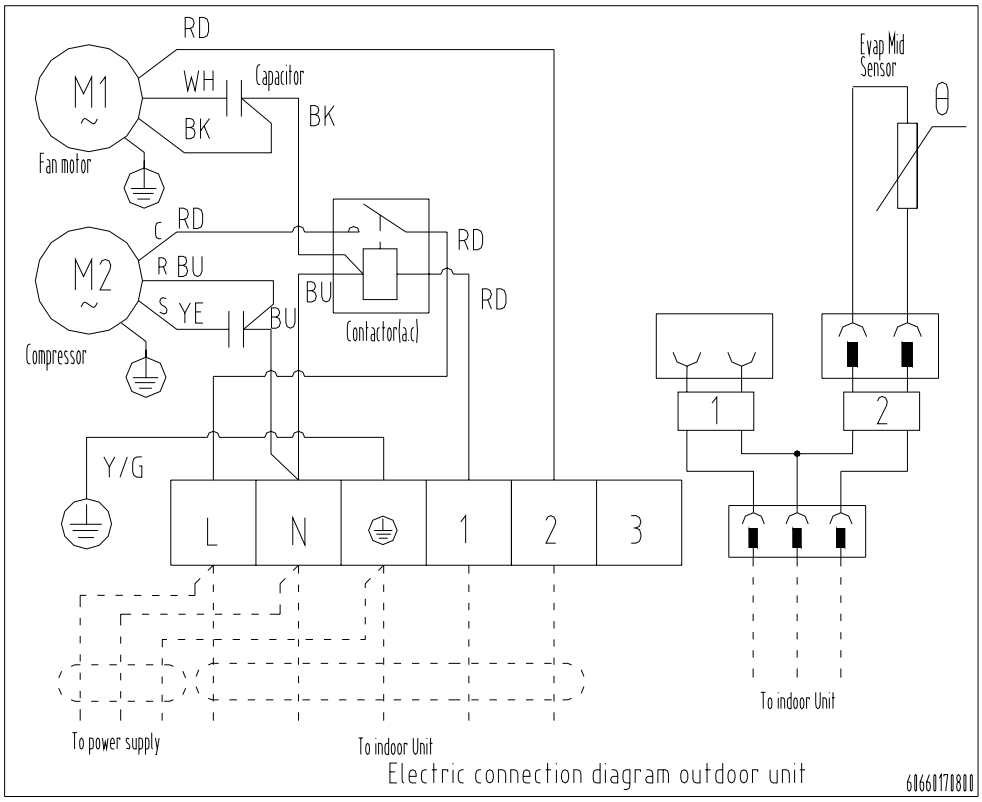

AL-C(H)36/5R1(U), AL-C(H)48/5R1(U), AL-C(H)60/5R1(U)

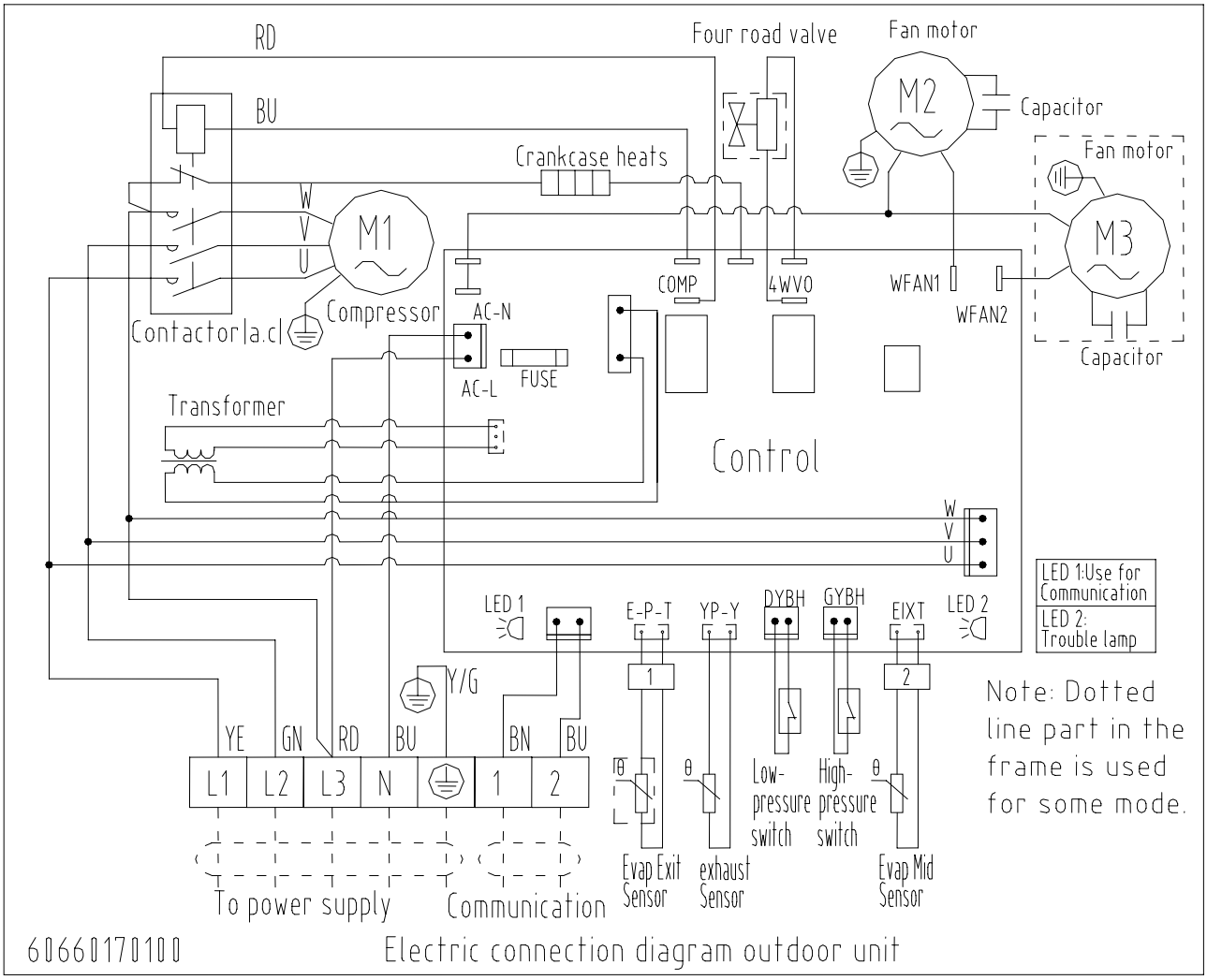

Introduction of Control Board QRD-SW3F-HCE1 (outdoor unit board) sockets (Power supply 380V-415V)

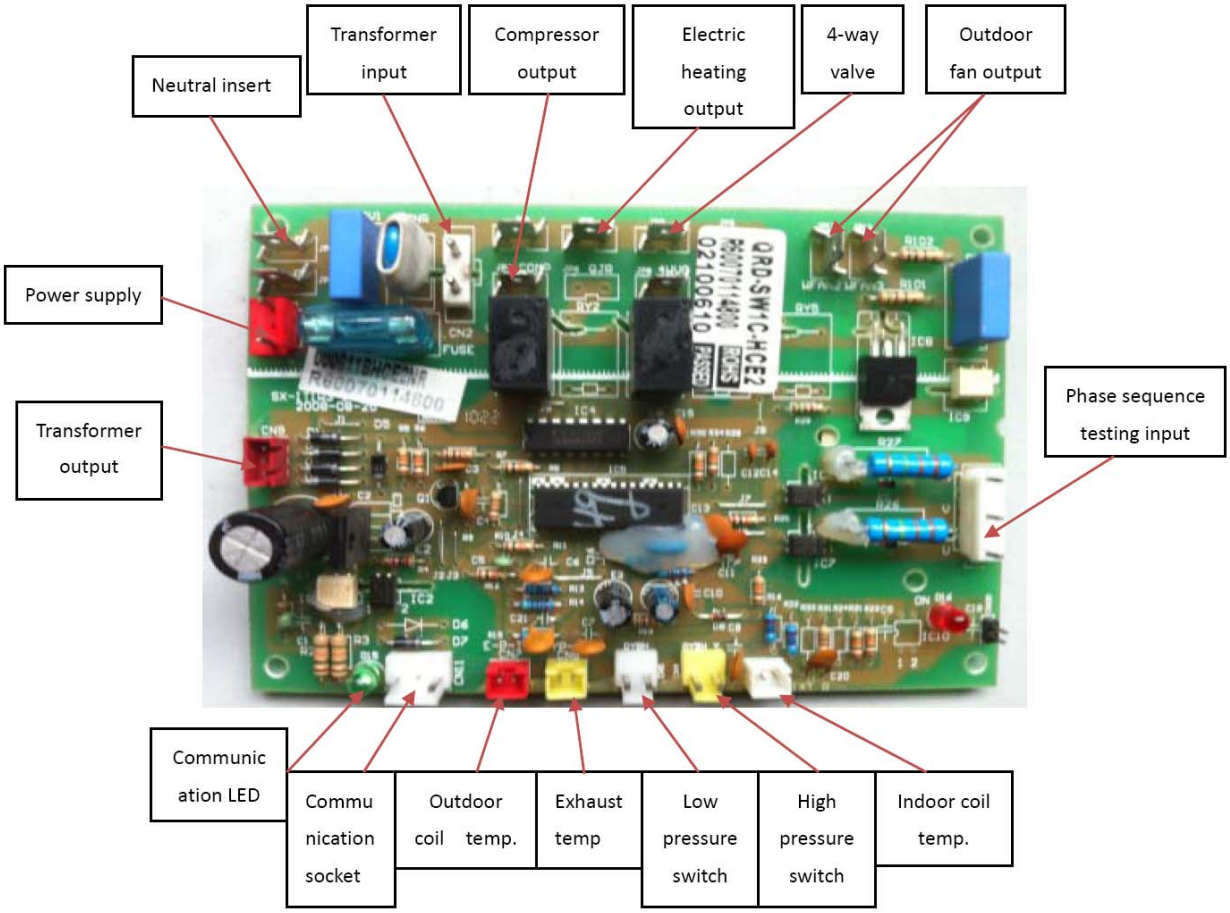

6. Explore View

AL-C(H)12/4R1(U)

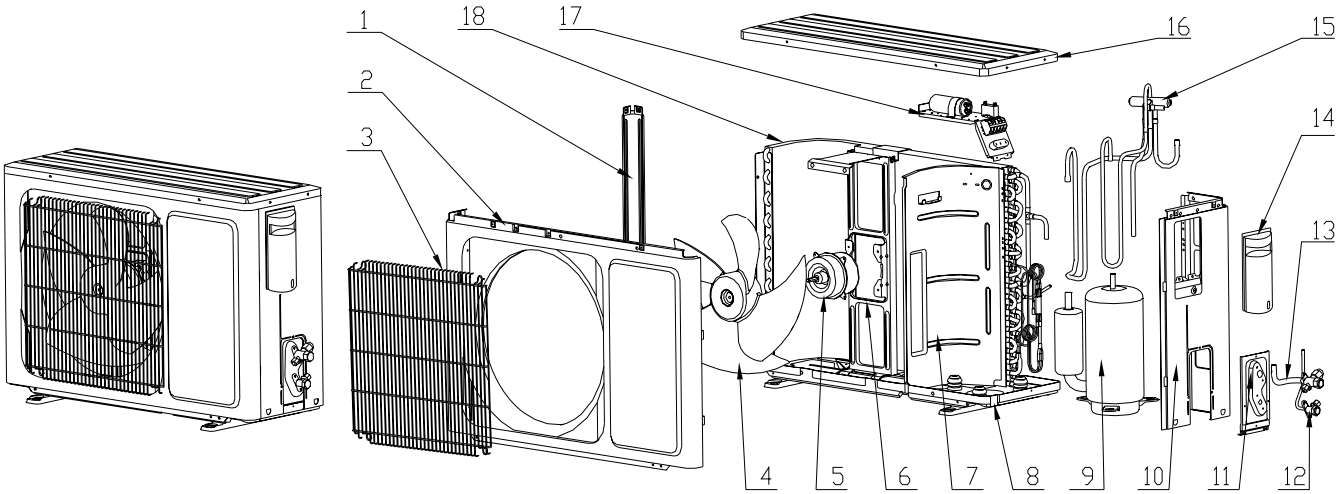

AL-C(H)12/4R1(U) spare parts list

N0.	Chinese name	Part Name	Quantity	Remark
1	左侧支撑板	Left-hand board	1	
2	面板	Big panel	1	
3	面板网罩(钢丝)	Net for big panel	1	
4	轴流风叶	Axial-flow wind leaves	1	Φ400
5	室外风扇电机	Outdoor Motor	1	
6	电机架	Motor bracket	1	
7	隔风立板	Wind-defending vertical board	1	
8	底盘组件	Chassis assembly	1	
9	压缩机	Compressor	1	PA150X2C-4FT
10	右侧板	Right-hand board	1	
11	阀板	Stop valve board	1	
12	截止阀组件 1/4in	Stop valve 1/4in	1	
13	截止阀组件 1/2in	Stop valve 1/2in	1	
14	电器盖板	Cover for electric components	1	
15	四通阀管路组件	Four-way valve assembly	1	
15.1	四通阀	Four-way valve loop	1	Not including Cooling
15.2	四通阀线圈	Four-way valve loop	1	
16	顶盖板	Top cover board	1	
17	电器架总成	Electric assembly	1	
17.1	电容 35μF	Capacitor for Compressor	1	35μF
17.2	电容 2.5μF	Capacitor for fan motor	1	2.5μF
17.3	端子板	Terminal board	1	
17.4	电器架	Electric components box	1	
17.5	传感器 0.5m	Sensor 0.5m	1	5K3470 EL2A

17.6	传感器 1m	Sensor 1m	1	5K3470 EL2A
18	冷凝器总成	condenser assembly	1	
18.1	冷凝器组件	condenser part	1	
18.2	制冷毛细管	Cooling capillary	1	
18.3	制热毛细管	Heating capillary	1	

AL-C(H)18/4R1(U), AL-C(H)24/4R1(U)

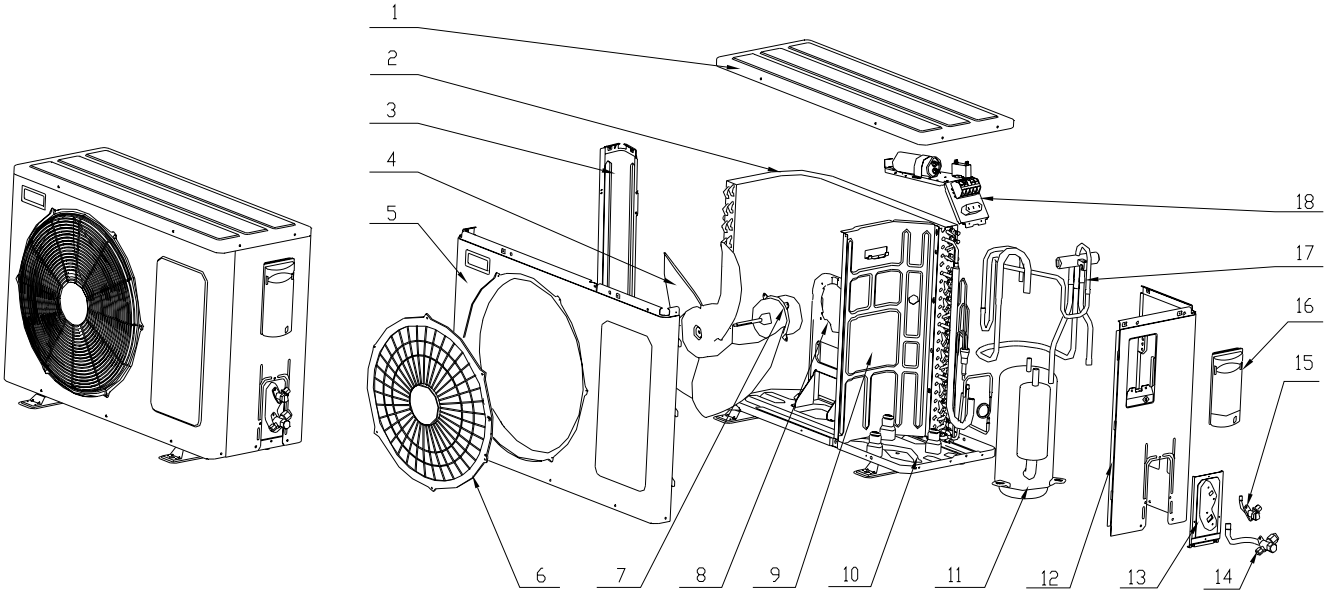

AL-C(H)18/4R1(U) spare parts list

N0.	Chinese name	Part Name	Quantity	Remark
1	顶盖板	Top cover board	1	
2	冷凝器总成	condenser assembly	1	
2.1	冷凝器组件	condenser part	1	
2.2	制冷毛细管	Cooling capillary	1	
2.3	制热毛细管	Heating capillary	1	
3	左侧板	Left-hand board	1	
4	轴流风叶	Axial-flow wind leaves	1	Φ420×150
5	面板	Big panel	1	
6	面板网罩	Net for big panel	1	
7	室外风扇电机	Outdoor Motor	1	
8	电机架组件	Motor bracket assembly	1	
9	隔风立板	Wind-defending vertical board	1	
10	底盘组件	Chassis assembly	1	
11	压缩机	Compressor	1	PA215X2CS-4KU1
12	右侧板	Right-hand board	1	
13	阀板	Stop valve board	1	
14	截止阀组件 1/4in	Stop valve 1/4in	1	
15	截止阀组件 1/2in	Stop valve 1/2in	1	
16	电器盖板	Cover for electric components	1	
17	四通阀管路组件	Four-way valve assembly	1	
17.1	四通阀	Four-way valve loop	1	Not including Cooling mode
17.2	四通阀线圈	Four-way valve loop	1	
18	电器架总成	Electric assembly	1	
18.1	电容 50μF	Capacitor for Compressor	1	50μF

18.2	电容 4μF	Capacitor for fan motor	1	4μF
18.3	端子板	Terminal board	1	
18.4	电器架	Electric components box	1	
18.5	传感器 0.5m	Sensor 0.5m	1	5K3470 EL2A
18.6	传感器 1m	Sensor 1m	1	5K3470 EL2A

AL-C(H24/4R1(U) spare parts list

N0.	Chinese name	Part Name	Quantity	Remark
1	顶盖板	Top cover board	1	
2	冷凝器总成	condenser assembly	1	
2.1	冷凝器组件	condenser part	1	
2.2	制冷毛细管	Cooling capillary	1	
2.3	制热毛细管	Heating capillary	1	
3	左侧板	Left-hand board	1	
4	轴流风叶	Axial-flow wind leaves	1	Φ440
5	面板	Big panel	1	
6	面板网罩	Net for big panel	1	
7	室外风扇电机	Outdoor Motor	1	YDK85-6-50
8	电机架组件	Motor bracket assembly	1	
9	隔风立板	Wind-defending vertical board	1	
10	底盘组件	Chassis assembly	1	
11	压缩机	Compressor	1	PA290X3CS-4MUI
12	右侧板	Right-hand board	1	
13	阀板	Stop valve board	1	
14	截止阀组件 3/8in	Stop valve 3/8in	1	
15	截止阀组件 5/8in	Stop valve 5/8in	1	
16	电器盖板	Cover for electric components	1	
17	四通阀管路组件	Four-way valve assembly	1	
17.1	四通阀	Four-way valve loop	1	Not including Cooling
17.2	四通阀线圈	Four-way valve loop	1	
18	电器架总成	Electric assembly	1	
18.1	电容 50μF	Capacitor for Compressor	1	50μF
18.2	电容 4μF	Capacitor for fan motor	1	4μF
18.3	端子板	Terminal board	1	
18.4	电器架	Electric components box	1	
18.5	交流接触器	AC contactor	1	
18.5	传感器 0.5m	Sensor 0.5m	1	5K3470 EL2A
18.6	传感器 1m	Sensor 1m	1	5K3470 EL2A

AL-C(H)36/5R1(U)

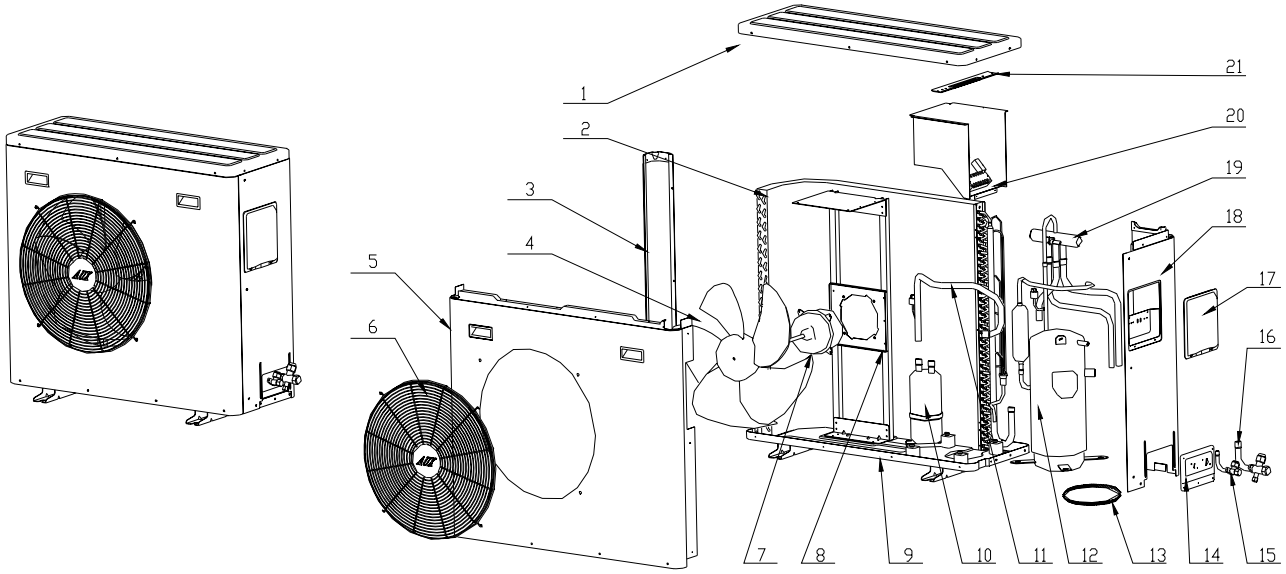

AL-C(H)36/5R1(U) spare parts list

N0.	Chinese name	Part Name	Quantity	Remark
1	顶盖板	Top cover board	1	
2	冷凝器总成	condenser assembly	1	
2.1	冷凝器组件	condenser part	1	
2.2	制冷毛细管	Cooling capillary	1	
2.3	制热毛细管	Heating capillary	1	
3	左侧板	Left-hand board	1	
4	轴流风叶	Axial-flow wind leaves	1	Φ490×130
5	面板	Big panel	1	
6	面板网罩	Net for big panel	1	
7	室外风扇电机	Outdoor Motor	1	YDK150-6C-420
8	电机架组件	Motor bracket assembly	1	
9	底盘组件	Chassis assembly	1	
10	气液分离器组件	Flash chamber assembly	1	
11	回气管组件	Return air pipe assembly	1	
11.1	低压开关	Low Pressure Switch	1	
12	压缩机	Compressor	1	C-SBP130H38A
13	油温加热带	Oil heat strap	1	
14	阀板	Stop valve board	1	
15	截止阀组件 3/8in	Stop valve 3/8in	1	
16	截止阀组件 5/8in	Stop valve 5/8in	1	
17	电器盖板	Cover for electric components	1	
18	右侧板	Right-hand board	1	
19	四通阀管路组件	Four-way valve assembly	1	
19.1	四通阀	Four-way valve loop	1	Not including
19.2	四通阀线圈	Four-way valve loop	1	Cooling-only units
19.3	消音器	Muffler	1	

19.4	高压开关	High Pressure Switch	1	
20	电器架总成	Electric assembly	1	
20.1	电容 6μF	Capacitor for fan motor	1	6μF
20.2	端子板	Terminal board	1	
20.3	电器架	Electric components box	1	
20.4	交流接触器	AC contactor	1	
20.5	控制板	PCB board	1	QRD-SW1C-HCE1
20.6	变压器	Transformer	1	
20.7	传感器 1.3m	Sensor 1.3m	1	5K3470 XH2
20.8	传感器 0.9m	Sensor0.9m	1	6.3K3954 XH2
20.9	传感器 0.9m	Sensor 0.9m	1	5K3470 XH2
21	电器架固定板	Electric components bracket	1	

AL-C(H)48/5R1(U), AL-C(H)60/5R1(U)

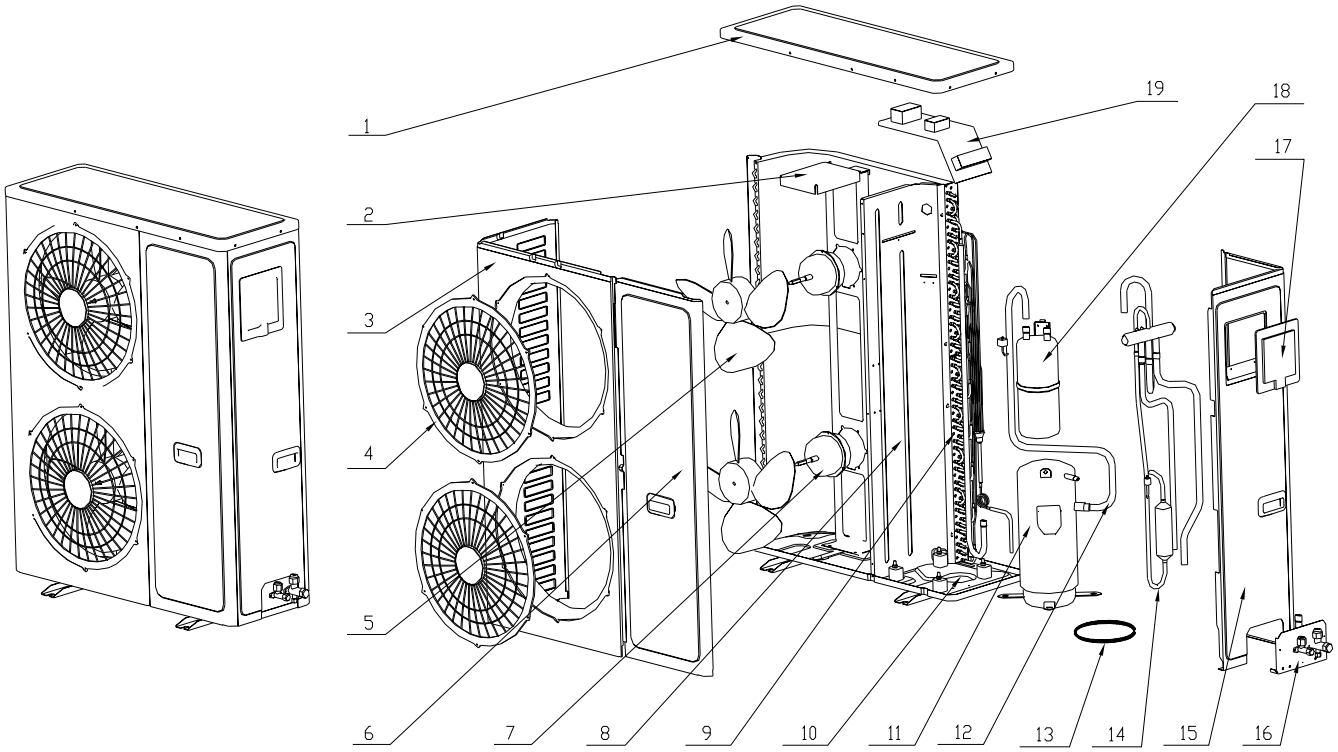

AL-C(H)48/5R1(U) spare parts list

N0.	Chinese name	Part Name	Quantity	Remark
1	顶盖板	Top cover board	1	
2	电机架组件	Motor bracket assembly	1	
3	大面板	Big panel	1	
4	面板网罩	Net for big panel	2	
5	轴流风叶	Axial-flow wind leaves	2	
6	小面板	Small panel	1	
7	室外风扇电机	Outdoor Motor	2	YDK68-6-359

8	隔风立板	Wind-defending vertical board	1	
9	冷凝器总成	Condenser assembly	1	
9.1	上冷凝器组件	Upside condenser part	1	
9.2	下冷凝器组件	Underside condenser part	1	
9.3	制冷毛细管	Cooling capillary	1	
9.4	制热毛细管	Heating capillary	1	Not including Cooling-only units
10	底盘组件	Chassis assembly	1	
11	压缩机	Compressor	1	C-SBP170H38A
12	回气管组件	Return air pipe assembly	1	
12.1	低压开关	Low Pressure Switch	1	
13	油温加热带	Oil heat strap	1	
14	四通阀管路组件	Four-way valve assembly	1	
14.1	高压开关	High Pressure Switch	1	
14.2	四通阀	Four-way valve	1	Not including Cooling-only units
14.3	四通阀线圈	Four-way valve loop	1	
14.4	消音器	Muffler	1	
15	右侧板	Right-hand board	1	
16	阀板组件	Stop valve assembly	1	
16.1	截止阀3/8in	Stop valve 3/8in	1	
16.2	截止阀3/4in	Stop valve 3/4in	1	
17	电器盖板	Cover for electric components	1	
18	气液分离器	Flash chamber	1	
19	电器总成	Electric assembly	1	
19.1	控制板	PCB board	1	
19.2	交流接触器	AC contactor	1	
19.3	电容3μF	Capacitor for fan motor	1	3μF
19.4	端子板	Terminal board	1	
19.5	变压器	transformer	1	
19.6	传感器 1.3m	Sensor 1.3m	1	5K3470 XH2
19.7	传感器 0.9m	Sensor0.9m	1	6.3K3954 XH2
19.8	传感器0.9m	Sensor 0.9m	1	5K3470 XH2
19.9	电器架	Electric components box	1	

AL-C(H)60/5R1(U) spare parts list

N0.	Chinese name	Part Name	Quantity	Remark
1	顶盖板	Top cover board	1	
2	电机架组件	Motor bracket assembly	1	
3	大面板	Big panel	1	
4	面板网罩	Net for big panel	2	
5	轴流风叶	Axial-flow wind leaves	2	
6	小面板	Small panel	1	
7	室外风扇电机	Outdoor Motor	2	YDK68-6-359

8	隔风立板	Wind-defending vertical board	1	
9	冷凝器总成	Condenser assembly	1	
9.1	上冷凝器组件	Upside condenser part	1	
9.2	下冷凝器组件	Underside condenser part	1	
9.3	制冷毛细管	Cooling capillary	1	
9.4	制热毛细管	Heating capillary	1	Not including Cooling-only units
10	底盘组件	Chassis assembly	1	
11	压缩机	Compressor	1	JT170G-P8Y1
12	回气管组件	Return air pipe assembly	1	
12.1	低压开关	Low Pressure Switch	1	
13	油温加热带	Oil heat strap	1	
14	四通阀管路组件	Four-way valve assembly	1	
14.1	高压开关	High Pressure Switch	1	
14.2	四通阀	Four-way valve	1	Not including Cooling-only units
14.3	四通阀线圈	Four-way valve loop	1	
14.4	消音器	Muffler	1	
15	右侧板	Right-hand board	1	
16	阀板组件	Stop valve assembly	1	
16.1	截止阀3/8in	Stop valve 3/8in	1	
16.2	截止阀3/4in	Stop valve 3/4in	1	
17	电器盖板	Cover for electric components	1	
18	气液分离器	Flash chamber	1	
19	电器总成	Electric assembly	1	
19.1	控制板	PCB board	1	
19.2	交流接触器	AC contactor	1	
19.3	电容3μF	Capacitor for fan motor	1	3μF
19.4	端子板	Terminal board	1	
19.5	变压器	transformer	1	
19.6	传感器 1.3m	Sensor 1.3m	1	5K3470 XH2
19.7	传感器 0.9m	Sensor0.9m	1	6.3K3954 XH2
19.8	传感器 0.9m	Sensor 0.9m	1	5K3470 XH2
19.9	电器架	Electric components box	1	

7. Installation

7.1 Preparation and equipments before installation

Please buy following spare parts from your local market before installation	Besides general implements, other implements are needed when connecting the pipe
Hung bolts M12, 4 pcs	Acetylene cylinders, oxygen cylinders (when longer pipe used it should be welded)
Drainage pipe PVC	One set pipe cut machine. (cut copper pipe)
Copper connecting pipe	Refrigerant cans, electronic balance (when longer pipe used additional gas should be charged)
Adhesive belt (big size) 5 pcs, (small size) 5 pcs	Pressure gauges, pipe clamp, welding torch, 2B silver electrode
Heat insulation material used to connect copper pipe (PE foam material, its thickness is more than 8mm)	Wrench 2 pcs, one of them is with adjustable torque wrench (42N.m,65N.m,100N.mm)
Power cable, electrical wire between indoor and outdoor unit(Must be in accordance with the wire diameter in the wiring diagram)	Nitrogen cylinder (in order to prevent oxidation when welding, using Nitrogen to replace the air)

Select installation position of outdoor unit

◇The site shall be strong enough to bear its weight, prevent noise and vibration.
◇The site shall be ensured to avoid direct sunshine, if necessary set a Havelock above the outdoor unit.
◇The site shall be easy to drainage the rain water and the frost water.
◇The site shall be ensured that the outdoor unit will not be covered by snow LDring the winter season.
◇The site shall be ensured that the outlet is not facing the strong wind.
◇The site shall be ensured that outlet air and operation noise will not affect the neighbors' daily life.
◇The site shall be ensured that the outdoor unit will not be affected by the garbage and oil mist.

Warning :

If outdoor unit working under such environment which contains oil (including machine oil) salt(marine areas), sulfide gas (hot springs and oil refinery areas), those substance may lead to the failure work of the outdoor unit.

Maintenance and ventilation space

◇The site shall be easy for ventilation then the outdoor unit can inhale and discharge air easily. What's more please reserve enough space for maintenance.

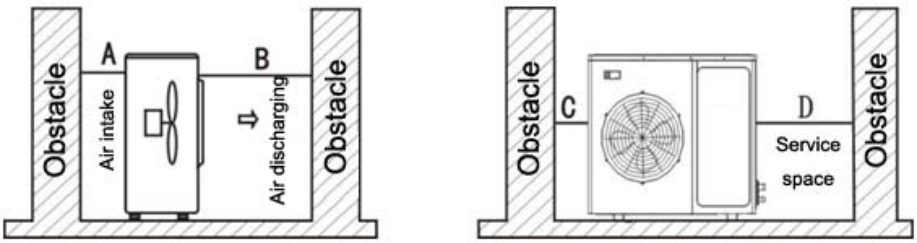

Note: Require A＞300mm; B＞1500mm; C＞300mm; D＞500mm;

Outdoor unit installation

◇Use size M10 bolt and nut to fasten the outdoor unit tightly on the bracket, keep it in the horizontal level.

The suitable length for bolt shall 20mm over the base level, in order to minimize vibration please do set a rubber shock absorber.

◇If the outdoor unit is mounted on the wall or on the rooftop, in order to prevent earthquake and strong wind please fasten it as tightly as possible.

◇Set a drainage channel to ensure the condensing water can drain out smoothly.

◇To avoid that only four angles metal sheet to support the outdoor unit.

7.2 Connection piping installation

Piping installation precaution

Please choose the phosphorus deoxidation seamless copper pipe as the piping.

◇If use the lengthen piping needs welding:

Please welding before fasten the nut, when welding using nitrogen gas to replace the air in the pipe in order to prevent oxidation.

◇If there are many points to be welded when installing the lengthen piping, please set a filter in the pipe(buy from local market)

◇Please use nitrogen gas or air to remove the dust and water in the pipe,

◇Please lay out the piping according to the tend towards of the piping, but it is not allowed more than 3 times curved at the same point of the pipe(if do like this the pipe will become rigid)

◇Pipe bending machine is used during the process of bending the pipe, the curvature shall not be too small or it will affect the refrigerant flow.

Piping specification selection

As to the detail selection please take reference to the cooling capacity adjust index figure during different installation situations.

Piping diameter	Tighten torque	Expanding size	Expanding shape	Paint the frozen oil
1/4in(φ6.35mm)	15-19(N·m)	8.3-8.7mm	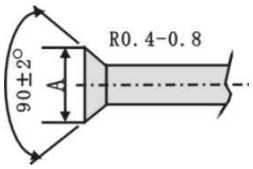	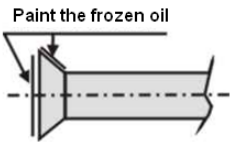
3/8in(φ9.52mm)	35-40(N·m)	12.0-12.4mm		
1/2in(φ12.7mm)	50-60(N·m)	15.4-15.8mm		
5/8in(φ15.88mm)	62-76(N·m)	18.6-19.0mm		
3/4in(φ19.05mm)	70-75(N·m)	22.9-23.3mm		

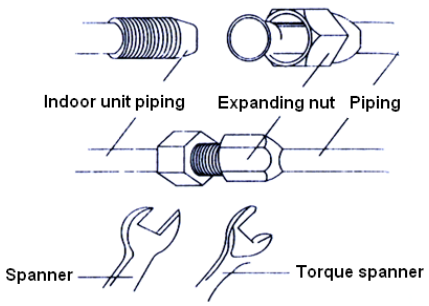

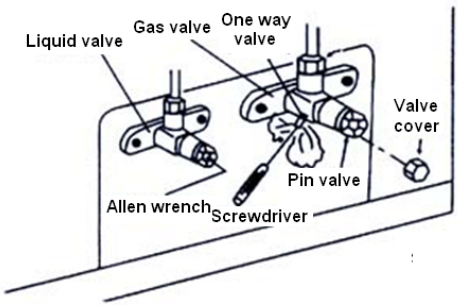

Piping connection

◇Using expanding machine to expand accessories, the size of horn shown in the above figure:

◇Paint a thin layer of frozen oil at both inside and outside part of the expanding.

◇Make the expanding right to the screw thread shape connection of the indoor unit, using hands to

tighten the nut then using a wrench to tighten the nut again, the tighten torque as follows figure.

◇Take out the cover of the indoor unit gas valve and liquid valve, make the expanding right to the stop valve of outdoor unit, using hands to tighten the nut then using a wrench to tighten the nut again, the tighten torque as follows figure.

Equivalent pipe length conversion

Equivalent pipe length means converting pipe elbow to straight pipe length after considerate the pressure loss.

Elbow and Oil loop conversion tablet

Type Pipe Dia.(mm)	Bend	Oil Loop
6.35	0.10	0.7
9.52	0.18	1.3
12.70	0.20	1.5
15.88	0.25	2.0
19.05	0.35	2.4
22.02	0.40	3.0

Equivalent pipe length L＝Actual Pipe length L+ Bend Qty× Equivalent pipe bend length+ Oil Loop Qty × Equivalent Oil Loop length

Sample:

ALCA-H42A5/C5 Actual Pipe length is 25 meters, Gas pipe diameter is 19.05mm. If there's 5 bends and 2 oil loops during the installation, then the equivalent pipe length should be:

L=25+0.35×5+2.4×2=31.5(m)

◇Specification of connection pipe for indoor unit and outdoor unit

Cooling Capacity(Btu/h)		12000	18000	24000	36000	48000	60000
Connection Pipe (mm)	Liquid Pipe	Φ6.35	Φ6.35	Φ9.52	Φ9.52		
	Gas Pipe	Φ12.7	Φ12.7	Φ15.88	Φ19.05		
Max. Length(m)	Liquid Pipe Dia.	Φ6.35	Φ6.35	Φ9.52	Φ9.52		
	Gas Pipe Dia.	Φ12.7	Φ12.7	Φ15.88	Φ19.05		
	Max. Length	15	20	30	50		
Max. Height (m)		10	15	15	30		
Max. Bend Qty		4	4	4	10		
Extra R410a per meter when the pipe length is more than 5 meter (kg)		0.02	0.02	0.02	0.07		

Caution:

1.The standard Pipe length is 5m, if the pipe length is less than this then no additional charging is necessary. If the pipe length is more than this then you should charge more refrigerant into the system according to the above Charging Data

2.The thickness of the pipe is 0.5-1.0, bearing pressure is 3.040MPa;

3.If the connection pipe is too long, the cooling capacity and stability would be decreased. And the more bend quantity, the resistance in the piping system would be bigger, then the cooling and heating capacity would be decreased even lead to compressor broken. We suggest you to use the shortest connection

pipe according to the pipe length parameter in this manual.

Emptying or vacuum

Before charging the refrigerant to the system, to ensure that there is no impurities, water or non-condensable gas. So, emptying and vacuum operation should be carried out.

◇Vacuum: when process this operation please be sure that the connection pipe is tightened up.

1. Screw off the cover of maintenance valve connection, connect the pressure gauge to the connection of maintenance valve
2. Connect the vacuum pump to the pressure gauge, turn on the vacuum pump and pressure gauge to process the vacuum operation toward the indoor unit and piping, while to ensure that the absolute pressure is no less than 50Pa after this operation.
3. Turn off the pressure gauge and vacuum pump to keep the pressure in the same level in 20 minutes.

◇Emptying: when process this operation, please disconnect the high pressure valve with liquid valve.

1. Connect the gas valve of the stop valve to the thimble side of the rubber hoses, the other side of rubber hoses should be connected to the refrigerant tank.
2. Open the refrigerant tank valve, using the refrigerant inside the tank with high speed to empty the air in the indoor unit and the connection piping. When the outlet air becomes mist (it feels cold by touching it), then the air is emptied.
3. When ensure that the air is emptied, connect and tighten the high pressure valve of outdoor unit stop valve and liquid side connection pipe, keep this state more than 10 seconds.
4. Use soapy what to test each connection junctions (including lengthen piping welding junction)
5. Confirmed that there is no leakage, turn off the valve of refrigerant tank, take down the rubber hose as well.

◇Turn on the high-low pressure valve of the outdoor unit.

After vacuum and emptying, screw back the cover of the maintenance valve of outdoor unit low pressure valve, screw off the high-low pressure valve of the outdoor unit (note: shall totally turned off). Connect the refrigerant to the system.

Heat insulation package of piping

◇ Use heat insulation material with good insulation performanCF to wrap the pipe.

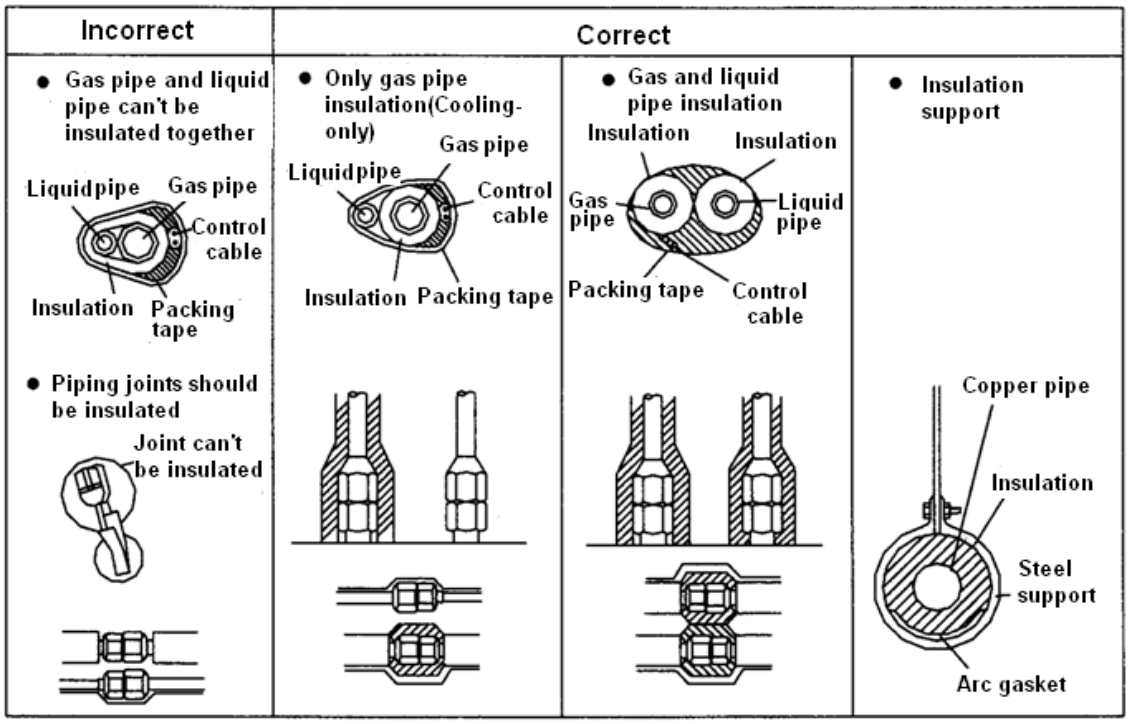

Notes

Drainage pipe and connection piping should be wrapped by heat insulation material respectively or there will be dew or leakage

During the high temperature working environment, our air conditioner is proved my dew conditioner experiment. But if it keeps on working during the high humidity (the dew temperature is more than23℃) environment which may lead to water leakage, in such condition please use following additional insulation material:

◇Glass fiber insulation material with the thickness between 10~20mm can be used.

◇The part of indoor unit which get in touch with the back side of ceiling should pasted with insulation material.

◇Besides the previously more than 8mm thick insulation material, connection piping (both gas pipe and liquid pipe), drainage pipe should be wrapped by additional 10~30 mm thick insulation material.

To seal the hole on the wall.

◇To prevent rainwater or other foreign bodies from entering the room and air-conditioner after installing the tubing and drain pipe, the gap between wall hole and tubing, drain pipe and electric wire should be sealed with mastic, sealant rubber or putty, or poor performance or leakage will result

◇If the outdoor unit is higher than indoor unit, tubing should be bent to ensure that the lowest point of the tubing is lower than the wall hole to prevent rainwater entering the room or air-conditioner along the piping system.

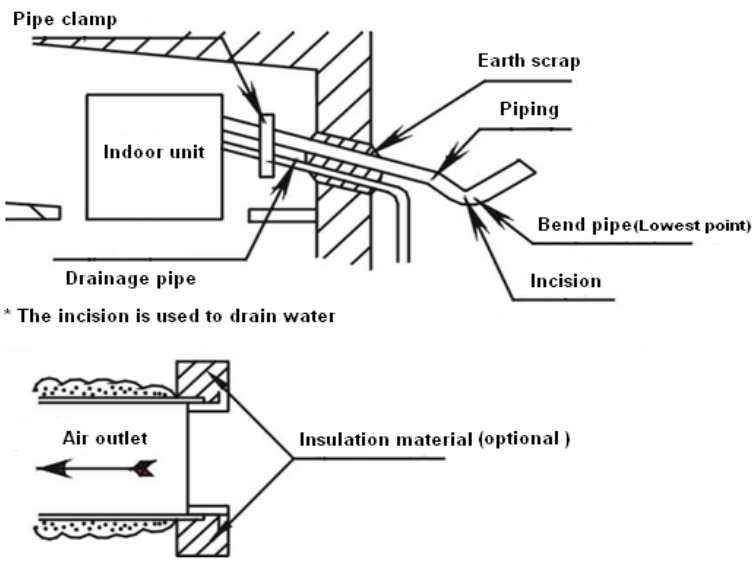

Additional refrigerant charge

When pipe length exceeds 5m, please add refrigerant according to the table below:

Connection piping	Piping size)		Additional refrigerant charge amount (kg/m)
	Gas pipe	Liquid pipe	
Piping between indoor and outdoor unit	φ9.52×0.75mm	φ6.35×0.75mm	0.02
	φ12.7×1mm	φ6.35×0.75mm	0.02
	φ15.88×1mm	φ9.52×0.75mm	0.05
	φ19.05×1mm	φ9.52×0.75mm	0.07
	φ19.05×1mm	φ12.7×1mm	0.09

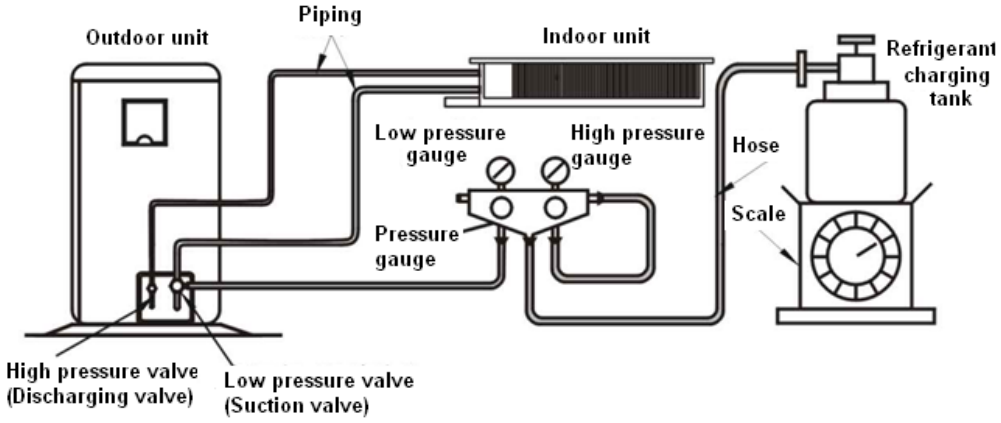

Others

Users to install the air conditioner at site shall ensure that the oil can return to the unit smoothly.

◇Horizontal pipes should incline toward the outdoor unit using a 20:1 slop.e

◇If there is a height difference between the indoor and outdoor unit, oil loops should be installed in the inter connecting gas (large) pipe;

When the vertical pipe height difference is less than 5 meters, an oil loop should be installed at the bottom of

the gas (large) pipe;
When the vertical pipe height difference is more than 5 meters, then for every 5 meters an oil loop must be installed at the bottom of the gas (large) pipe, and a short loop (liquid ring) should be installed at the exit of the indoor unit liquid (small) pipe;
When the connecting gas pipe vertical height difference is less than 5 meters but the constant rise distance is too long, an oil loop should be installed in the gas (large) pipe every 10 meters.

◇When the outdoor and indoor units are at the same elevation, the oil deposit bend and liquid ring do not need to be installed, if the horizontal connecting pipe length is less than 10 meters.
When the horizontal connecting pipe length is more than 10 metres, install an oil loop in the gas (large) pipe every 10 metres.

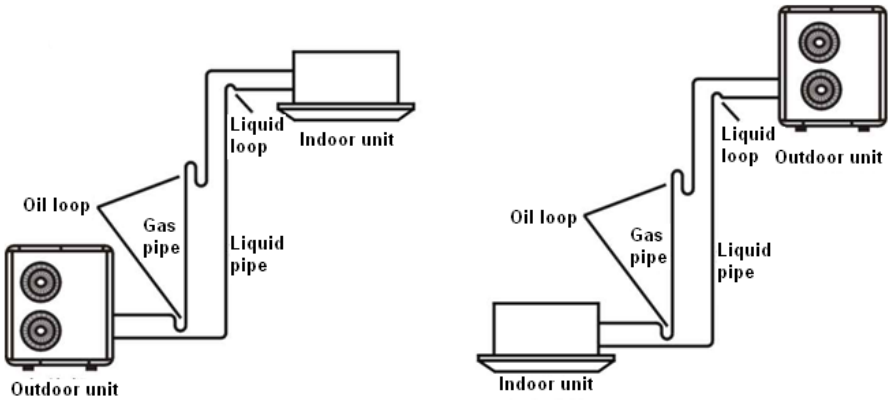

The indoor unit is above the outdoor unit
The outdoor unit is above the indoor unit

Note:
This chart is for explanation purposes. An actual installation will differ from this according to the site conditions. When making an oil trap the radius of the bend should be between 1.5 and 2 times the pipe diameter.

7.3. Electrical connection

7.3.1Electrical connection precaution

Warning	Installation of electric items must be carried out by qualified, professional technicians. An isolated circuitry should be fixed with whole-pole disconnection devices, which is with at least 3mm gap of touch point. . Power supply and indoor to outdoor connection should use special cable. Providing the necessity of installation or replacement, the professional technician of service store appointed by manufacturer must be required, while self-operation by users is prohibited.
	In case of any electric shock accident, the creepage protection devices /power supply on-off and breaker must be required with power supply.
	The specification of fuse for single phase control board is F5AL 250V, while for 3 phase control board, both indoor and outdoor unit, it is F3.15AL 250V。
	Machine must be earthed surely. If not, it'll be probably caused creepage.
	Equivalent 227IEC53(RVV) type of power cord of GB5023 or the excelled must be required. The cords should be fixed properly against broken, while ends/joints of cords is under outside force. Improper connection or fixation will cause disaster like fire….etc. Equivalent 245IEC57(YZW) type of power cord of GB5023 or the excelled must be used as connection line of indoor and outdoor.

Notice	The earth line is neither allowed to connect to gas pipe, water pipe or circuitry of telephone or lighting rod, nor to the earth line of other devices.
Others	Please fix power supply cord and connection wires of indoor and outdoor, in accordance with circuit diagram Fix the cords into terminal boards properly and safely with cable fixation tools to avoid any danger caused by the power cord under outside forces. After fixation, use bind tape (affixed) to bind wires avoiding any collision with other components like compressor, copper pipes…etc

7.3.2 Electrical connection

Wiring diagram of indoor & outdoor, refer to the section of part 1

Recommendation of power supply cord

Power supply:220V~,50Hz

Cooling capacity (Btu/h)	Model	Power supply spec.	Power supply side	Power supply cord	Connection wires
12000	ALCA-C(H)12/4R1 ALCF-C(H)12/4R1 ALLD-C(H)12/4R1	220-240V~50Hz	Indoor side	3×1.5mm^2	3×1.5mm^2
18000	ALCA-C(H)18/4R1 ALCF-C(H)18/4R1 ALMD-C(H)18/4R1	220-240V~50Hz	Indoor side	3×2.5mm^2	3×2.5mm^2
24000	ALCA-C(H)24/4R1 ALCF-C(H)24/4R1 ALMD-C(H)24/4R1 ALHD-C(H)24/4R1	220-240V~50Hz	Outdoor side	3×4mm^2	4×1mm^2

Power supply 380V~415V 3N,50Hz

Cooling capacity (Btu/h)	Model No.	Power supply spec.	Power supply cord of indoor unit	Power supply cord of outdoor unit	Connection wires
36000	ALCA-C(H)36/5R1 ALCF-C(H)36/5R1 ALMD-C(H)36/5R1 ALHD-C(H)36/5R1	Outdoor unit 380-415V 3N~50Hz Indoor unit 220-240V~50Hz Indoor and outdoor input separately	3×1 mm^2	5×2.5 mm^2	2×1 mm^2
48000	ALCA-C(H)48/5R1 ALCF-C(H)48/5R1 ALMD-C(H)48/5R1 ALHD-C(H)48/5R1				
60000	ALCA-C(H)60/5R1 ALCF-C(H)60/5R1 ALMD-C(H)60/5R1 ALHD-C(H)60/5R1				

Notice:

◇ Above mentioned power supply cord is the cable which connect air on-off of indoor to indoor/outdoor unit. Power supply cord of indoor/outdoor unit is the power supply cable connecting indoor and outdoor

unit

◇ The section area of power supply cord core is minimized one. To avoid voltage pressure dropped down, while longer power supply cord needed, the section area should be enlarged for one gauge.

◇ The connection wires to indoor unit is the cable of 27IEC53(RVV) type, 300/500V; while the connection wires to outdoor unit and the connection wires from outdoor to indoor unit is the multi-end of cable (neoprene)of 245IEC57(YZW)type,300/500V. if the single core with double skin type of cable is chosen for installation,, please choose 1# gauge of section area and wrapped with special jacket for electrician.

◇ All of the ceiling/floor type unit is without accessorial electric heating

7.3.3 wire connection

Remove electric control box cover of indoor unit, connect the wires in accordance with the electri diagram mentioned on the back of the cover. The wire ends must be tightly fixed into terminal boards without ease. The earth wire must be fixed into appointed position.

Outdoor wire connection

◇ Remove the electric item cover, which is positioned in the right side of outdoor unit, connect the wires in accordance with the electric diagram on the back of the cover.

◇ Be sure that pressing the wires tightly with the terminal boards while it through the board, the wire ends must be tightly fixed into terminal boards. The earth wire must be fixed into appointed position.

◇ After all the wire connected, bundle connection pipe, connection wires and drainage pipe with strips like mentioned drawing below:

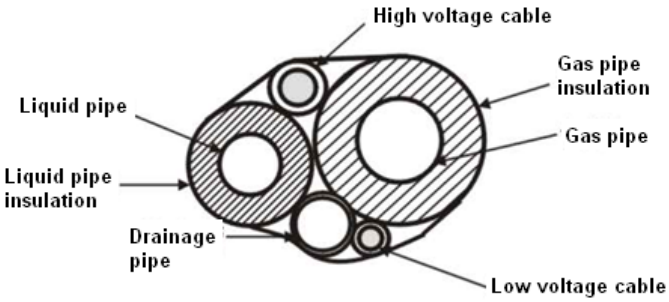

Notice:

◇ Compressor of AL-(H)36/5R1(U) , AL-(H)48/5R1(U), AL-(H)60/5R1(U) are 3 phase power supply with phase sequence protection in its outdoor control board. Please be careful with wire connection.

◇ Be sure do't make the drainage pipe flat while bundled.

7.4. Commissioning

After installation, machine can be started commissioning.

Check installation condition

◇ Check indoor/outdoor unit installation and wire connection in accordance with the requirement of service manual.

◇ Check the power supplying, diameter of wires, air on-off and make it sure that the items can be matched with machines and, earth wire connection safety.

◇ Check air inlet/outlet duct and make it sure that the items is clean, operating smoothly.

Commissioning

★ During winter, the first run of performance should be supplied power 8 hours in advance to warm-up

the crankcase.

★ During winter, while after 8 hours power off, the performance test should be 2 and half hours power on later:

◇ Power on, run machine with cooling mode.

◇ After 3 minutes compressor protection, check if there is normal cooling air come from indoor unit and if there is abnormal noise come from indoor/outdoor units

◇ Configure the mode with “fan” and check if there is high air come from indoor unit.

◇ Operate “swing” mode, check if the louver is properly swaying.

◇ Press the other buttons on the remote controller and check if the complete unit is on proper working condition

◇ Operate machine 1 hour with “cooling” mode and check if the drainage system is on proper condition

◇ Switch the mode for “heating” and check if there is warm air come from indoor, if there is abnormal noise come from indoor/outdoor units

◇ After confirmation of normal working condition, press the “on-off” to stop running machine.

◇ Then and there, train the end users with operation, maintaining and special notice.

7.5. Compressor freezing oil brand and standard oil charge

Outdoor model	Brand	Compressor Model	Compressor Lubricating Oil Model	Oil charge (cm^3)
AL-C(H)12/4R1(U)	TOSHIBA	PA150X2C-4FT	ESTER OIL VG74	480
AL-C(H)18/4R1(U)	TOSHIBA	PA215X2CS-4KU1	ESTER OIL VG74	750
AL-C(H)24/4R1(U)	TOSHIBA	PA290X3CS-4MUI	ESTER OIL VG74	950
AL-C(H)36/5R1(U)	SANYO	C-SBP130H38A	FV68S	1700
AL-C(H)48/5R1(U)	SANYO	C-SBP170H38A	FV68S	1700
AL-C(H)60/5R1(U)	DAKIN	JT170G-P8Y1	DAPHNE FVC68D	1500

7.6 Daily maintenance

Clean inhaler

◇ Before cleaning the filter, ensure the unit is switched off and the power is off;
◇ Forbidden to use water clean the filter , it will hurt PCB or get an electric shock;
◇ When cleaning filter net, be sure you are standing steady, if you use ladder or others, please be careful.

Washing filter net

◇ Use vacuum or water to clean the net;
◇ In order to ensure the best performance from your air conditioner clean the air filter regularly
◇ We recommend cleaning once a month or more frequently if required.
◇ When the filter is very dirty it can be washed in detergent and hot water (below 45℃);
◇ Ensure the filter is fully dry before reinstallation to avoid risk of electric shock or short circuiting;
◇ Do not dry the filter using direct sunlight;

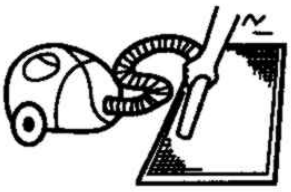

Check at the beginning of each season

◇ Check whether there are no physical obstructions at the air inlet or outlet of either indoor or outdoor unit;
◇ Check whether there are some garbage at the water outlet;
◇ Check whether electrical cables are in good condition, particularly the earth cable;
◇ When power on, check weather letters display on the screen of the wired controller.
◇ When working in winter,must connect power for 8 hours before switch on unit.

Check at the end of service season

◇ Operate for 2 3 hours under the ventilation condition; remove the moisture of the indoor unit.;
◇ If not use air conditioner in a long time, please close the power to save energy, the letter will disappear on wired controller;
◇ Take the batteries out of remote controller;
◇ Suggest that use dustproof to cover the outdoor unit;

Part 4 Trouble shooting

1.Main components of air conditioner 179

2.Electrical system main components 182

3.Poor efficiency explanation 184

4.Failure phenomenon 185

5.Electric components malfunction inspection 186

6.Failure code display 187

7.Failure analysis 189

1. Main components of air conditioner

Appellation	Figuration and inner configuration	Instruction
Rotary compressor	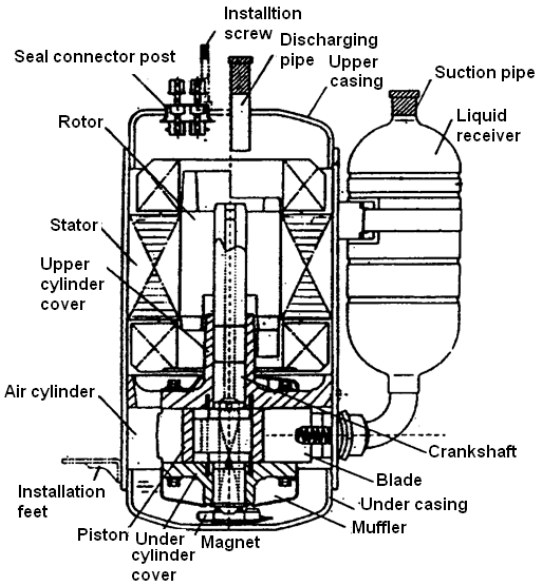	The function of compressor: after refrigerant evaporate in evaporator, compress the low temp and low pressure refrigerant gas, make the gas become high temp and high pressure gas, and then send the gas to condenser, make the refrigerant cycle, in this series products, all the compressors are complete hermetic compressor, in which motor and compressor are together.
Scroll compressor	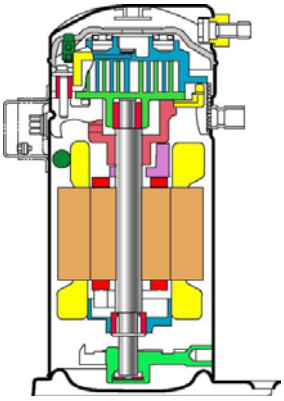	
condenser (heat exchanger)	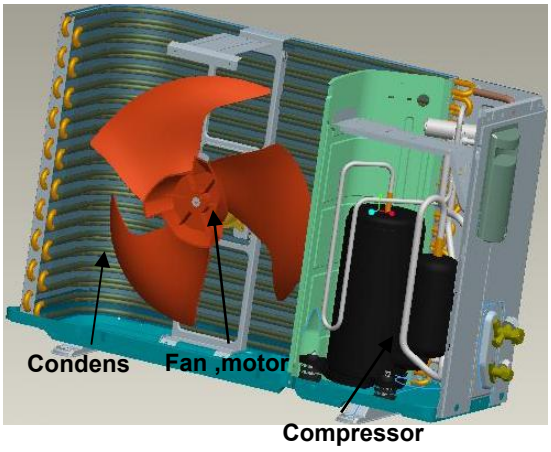	The function of condenser: Make the high temp and high pressure refrigerant gas discharged by compressor become liquid [make the gas heat exchange with air], (mark: when heating, condenser become evaporator)

Evaporator (heat exchanger)	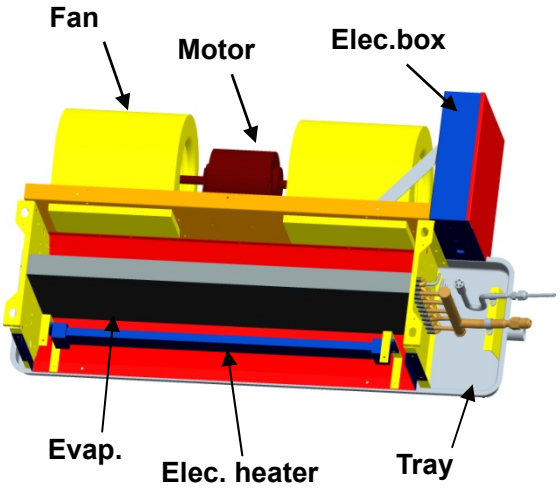	Function of evaporator: Make the low pressure refrigerant liquid from capillary or expansion valve happen heat exchange with air
Capillary (throttle components)	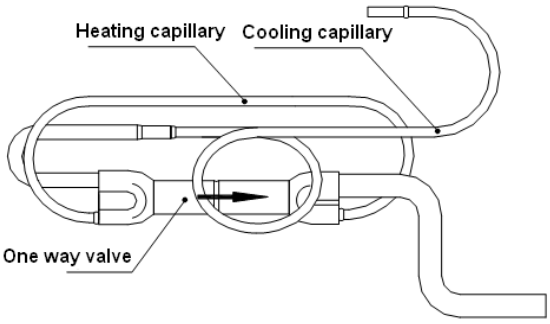	Function of capillary: Utilize aperture and length change bring pressure gap., control refrigerant flow quantity and pressure
One way valve		One way valve is used for heat pump unit, it make the refrigerant liquid only flow as the arrow direction
Four way valve	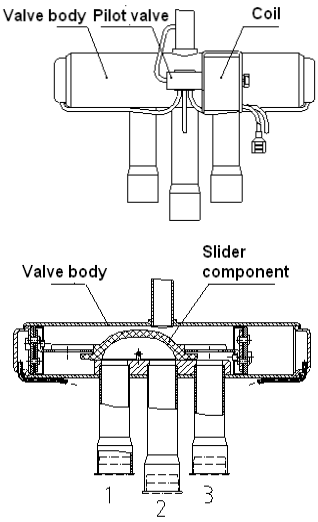	Function of 4 way valve: When change cooling mode into heating mode, it will change the flow direction of refrigerant; When heating, the valve get electricity (cooling without electricity), the slip assembly move to the right connect pipe 2 and 3, so change the flow direction.

Stop valve	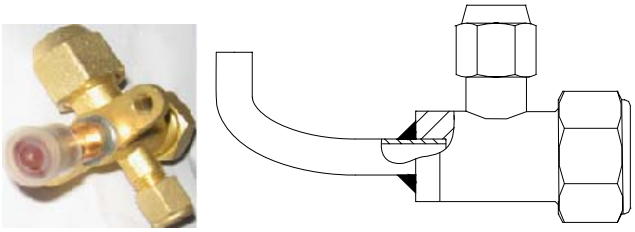	Function: To stop or release refrigerant, only on/off, can't adjust or throttle
Muffler	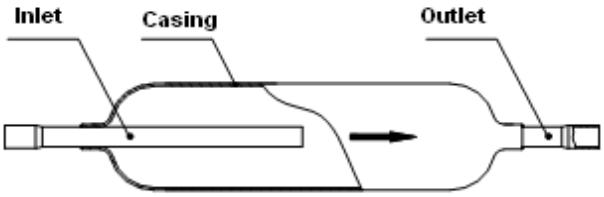	Function: Eliminate the system noise
Gas and liquid separator	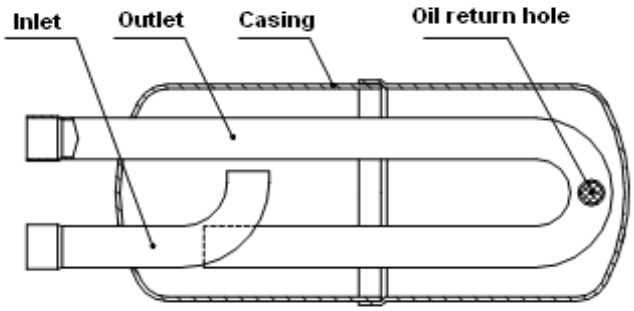	Function: Separate liquid and gas refrigerant, to protect the compressor

2.Electrical system main components

Appellation	Figuration and inner configuration	Instruction
PCB	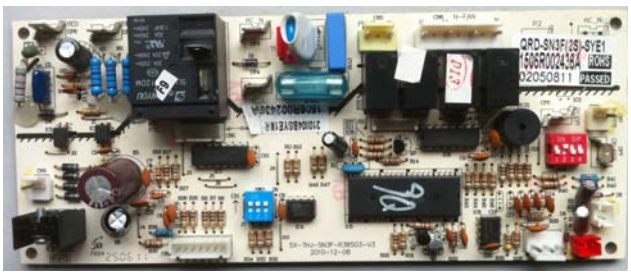	Function: Via program to control the relay, make every components on/off according to temperature and pressure variety, so to realize automatic control
Fan motor	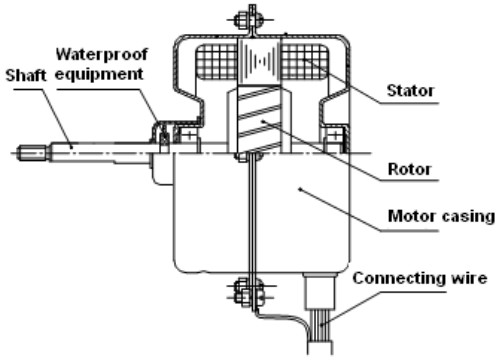	Function: Drive the fan, make the indoor and outdoor unit have heat exchange with air.
Pressure switch		Function: To avoid the air conditioner work in a abnormal pressure, making the air conditioner work safety.
Capacitor		Induce the single-phase motor produce gyre magnetic field, connect with the accessory winding, and participate in the operation.
AC Contactor	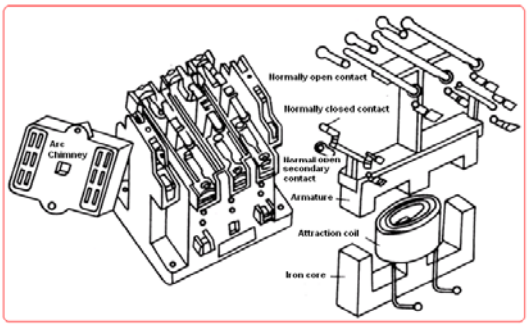	When AC contactor's inner magnetic loop without power, the counter force of spring and the weight of armature core will make the main connector disconnect, when the magnetic loop with power, it will make the main connector connect, the power is on, accessories contactor will act.

Heat relay	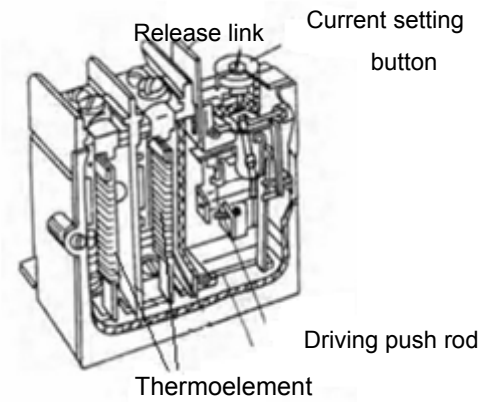	Heat relay is normally made up of double metal sheet, when the current is too large, the double metal sheet will heat distortion and movement, and open the protection contactor ,which causes control circuit disconnect and then the main circuit will be cut off, after it cooling, control circuit will restore connection, but the main circuit is still disconnect, need to press start button to restart unit,
Condensate pump	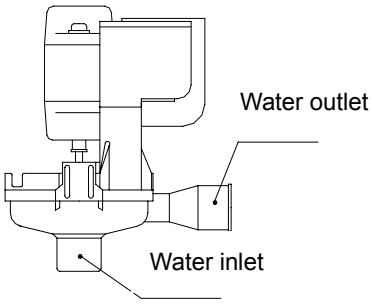	Only for Cassette, the pump head is 1.2 meter,the condensate pipe must have over 1/100 descend angle, after unit cooling or dehumidify stops running, the pump will still work 3 minutes to clean the condensate.
Sensor	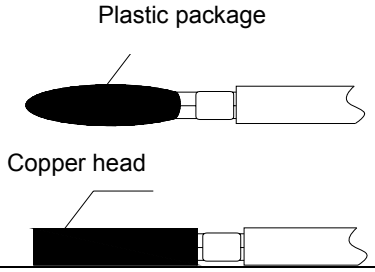	Physical properties will change along with the temperature, pressure change,used for check temperature and pressure.

3. Poor efficiency explanation

During the process of using air conditioner, some phenomenon seems to be malfunction but actually not. Thus when cooling effect does not achieve to your expectation, the following factors have to be ruled out

Phenomenon	Causing explanation
High outside temperature and too many indoor individuals, even air conditioner runs at full-load operation, the wind blowing out from air outlet is cold, but it is difficult to lower the indoor temperature, this is not malfunction.	When the outdoor temperature is higher, more heat penetrates into indoor space, which increases the cooling load of AC. If there are too many individuals(for example 10 individuals) and every individual gives off 120W, totally 1200W, this will running out of half of AC cooling capacity, and the unit's cooling capacity this time is far from enough, indoor temperature is hard to lower down. It is normal phenomenon and do not mean useless of AC.
Power voltage is too low, causing AC uneasy to start and shut down after starting, or fuse be burned out etc.	It is not malfunction, need to find out the causing, if the causing is the electricity net voltage is too low, user should load a power manostat to keep voltage between 220V-380V for AC normally running
Select high wind speed but indoor temperature still at high side, air flow from the air outlet is too weak.	It is because air filter is too dirty or blocked making cooling capacity fail to be brought by air flow, causing cooling capacity inadequate. Take out filter and wash, the problem will be solved.
Select high wind speed, the vibration and sound of unit are severe.	Fan runs at high speed, severe vibration and sound of unit is normal phenomenon
Temperature controller adjusts improper and max cooling capacity is not utilized completely, thus indoor temperature can't lower down.	Adjust the temperature controller, and problem will be solved.
As for Heat pump air conditioner heating effect is not ideal during cold winter, this is normal phenomenon.	The lowest temperature is －7℃ when heating, below this temperature unit cannot heat effectively.
Improper installation will lead to indoor temperature uneven or bad cooling effect.	It is necessary to adjust AC installation position

4.Failure phenomenon

Phenomenon	Causing explanation
Mirage comes out from indoor unit	When the cold air from AC cools the indoor air
Noise	1. When air conditioner stops running, there will be some noise, and this is because the refrigerant flows contrarily. 2. AC expand or shrink according to temperature, causing harsh sounds 3. Liquid sound is from refrigerant flowing
Sometimes, the room is smelly	1. The AC itself will not be smelly, if it is smelly, it is because environment smell accumulated 2. Solution: clean the filter
when heating, there is no wind at the beginning of starting unit	1. It is to prevent cold air blowing, please be patient 2. The unit has auto-restart function, when it is repowered again, unit will run according to the mode which is set before the power off. (Note: default is closed)

5.Electric components malfunction inspection

No	Component name	Inspection methods
1	Compressor	Using multi-meter ohm phase, there is correct resistance value among windings (single phase compressor refers to specification, three phase compressor resistance approximately equal), resistance of winding should be infinite.
2	Control board	1. 1Check if any connection part of PCB loosen or drop off, printed tinsel and components have any burn, fade, breaking off or aging phenomenon, all joints exist short circuit phenomenon etc. 2. Test the circuit board system in the term of voltage, pulse on, resistance variation, by using testing meter. 3. Judge the output and input is normal or not according to electric principle diagram
3	Contactor	4. Press the contactor by hand, the contactor reacts immediately and without question 5. The contacting point of contactor has no burn and melt phenomenon 6. The winding has resistance value below 1000, but cannot be nil or infinite
4	4-ways valve winding	The winding has resistance value below 1000, but cannot be nil or infinite
5	Capacitor	7. No expansion phenomenon apparently 8. Measure capacitor by using capacitor phase of multi-meter(if the multi-meter has no capacitor phase, use ohm phase, contact the two terminal of meter to two feet of capacitor, and quickly switch positive pole and negative pole and reconnect, the resistance should display from nil to infinite quickly. The resistance can't change is always nil or infinite).
6	Sensor	9. Using multi-meter to measure resistance, find out temperature according to resistance table, the temperature should accord with sensor temperature. 10. Resistance cannot be nil or infinite
7	Motor	11. No burning trace apparently 12. Using multi-meter ohm phase, there is correct resistance value among windings (single phase compressor refers to specification, three phase compressor resistance approximately equal), resistance of winding should be infinite.

6. Failure code display

When air condition has failure, the timing lamp on light board of controller will display different code according to different failure case.

6.1 1Unit failure code for unit power supply is 220-240V

Failure causing	Display mode 1 (indication lamp on display lamp board)	Display mode 2 (wired controller)	Display priority	Phenomenon
Communication failure	none	E5	1	shutdown
Drainage system failure	Timing lamp flash 4 times/8s	E4	2	shutdown
Phase failure, phase-loss or low voltage failure	Timing lamp lash 6 times/8s	E6	3	shutdown
Indoor temperature sensor abnormal (TA)	Timing lamp flash 1 times/8s	E1	4	shutdown
Indoor coil sensor abnormal(TE)	Timing lamp flash 2 times/8s	E3	5	shutdown
Outdoor coil sensor abnormal(TW)	Timing lamp flash 2 times/1s	E2	6	non-stop
Indoor heating over-load protection		None	7	shutdown
Defrosting(not failure)	Operation lamp flash	None	8	non-stop

6.2 Unit failure code for unit power supply is 380-415V

Failure causing	Display mode1 (indication lamp on display lamp board)	Display mode1 (failure lamp on control board)	Display mode3 (wired controller)	Display priority	Phenomenon
Communication failure	Flash 5 times and go out 2S	Flash 2 times and go out 2S	F1	1	shutdown
Wired controller communication failure	—	—	E5	1	shutdown
Drainage system failure	Flash 4 times and go out 2S	—	E4	3	shutdown
Outdoor protection(Phase failure)	Flash6 times and go out 2S	—	E6	2	shutdown
Outdoor protection (discharging over-temperature)	Flash 10 times and go out 2S	Flash 10 times and go out 2S	EA	7	shutdown
High pressure protection	Flash 9 times and go out 2S	Flash 1 times and go out 2S	E9	6	shutdown
Low pressure protection	Flash 9 times and go out 2S	Flash 3 times and go out 2S	E9	6	shutdown

Indoor temp. sensor abnormal(TA)	Flash 1 times and go out 2S	—	E1	4	shutdown
Indoor coil sensor abnormal(TE)	Flash 3 times and go out 2S	—	E3	5	shutdown
Outdoor coil sensor abnormal(TW)	Flash 2 times and go out 2S	Flash 2 times and go out 2S	E2	8	non-stop
Outdoor condensate temp. Sensor abnormal(TL)	Flash 7 times and go out 2S	Flash 7 times and go out 2S	E7	9	non-stop
Discharging temp. sensor abnormal(TP)	Flash 8 times and go out 2S	Flash 8 times and go out 2S	E8	10	non-stop

Note: When correct signal has not been received by wired control or main control board in 2 consecutive min, then the unit turns off and indicates relative failure code, once communication renew and failure code disappears automatically.

7.Failure analysis

Wired controller communication failure

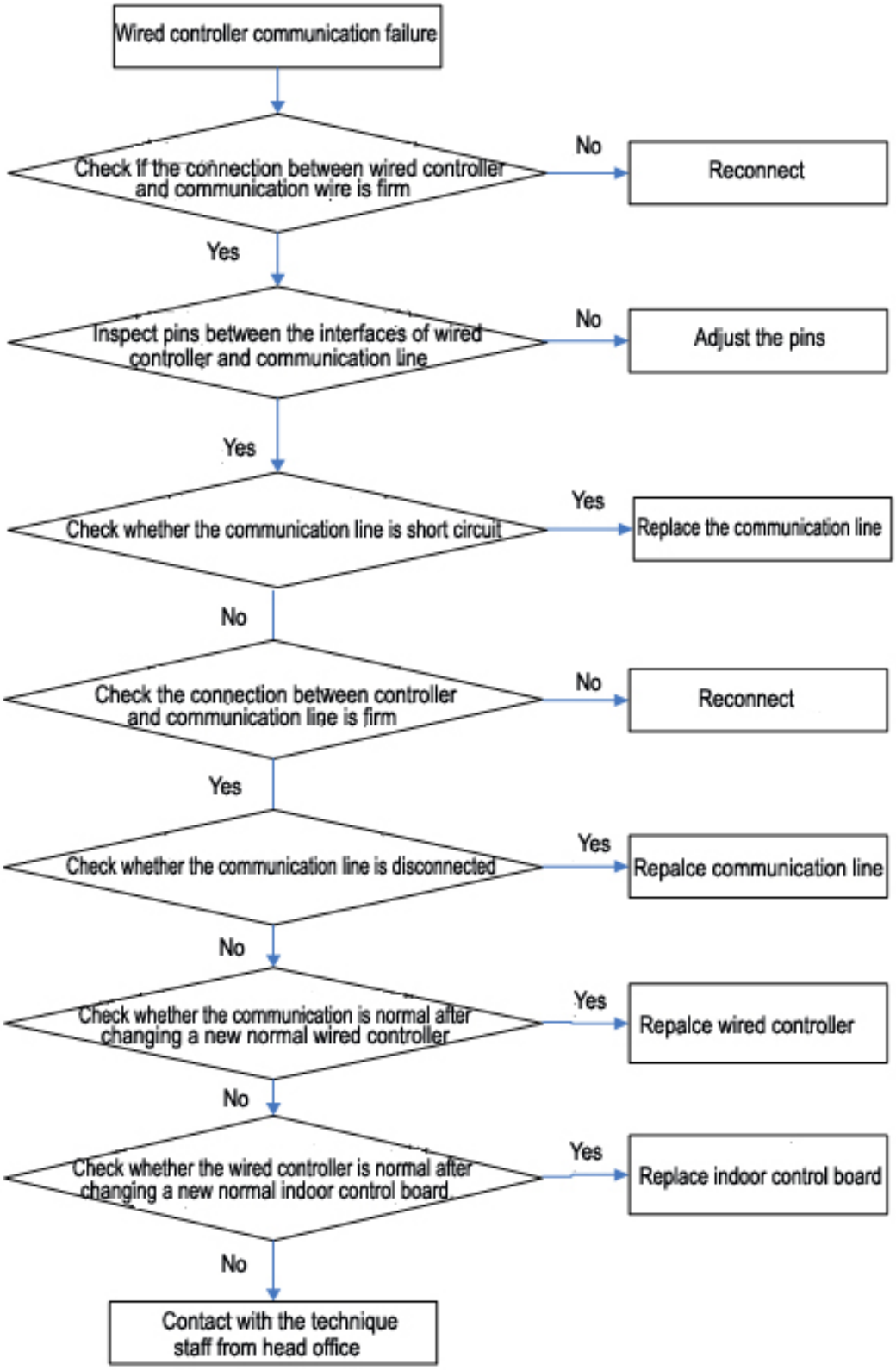

Communication failure between indoor and outdoor unit

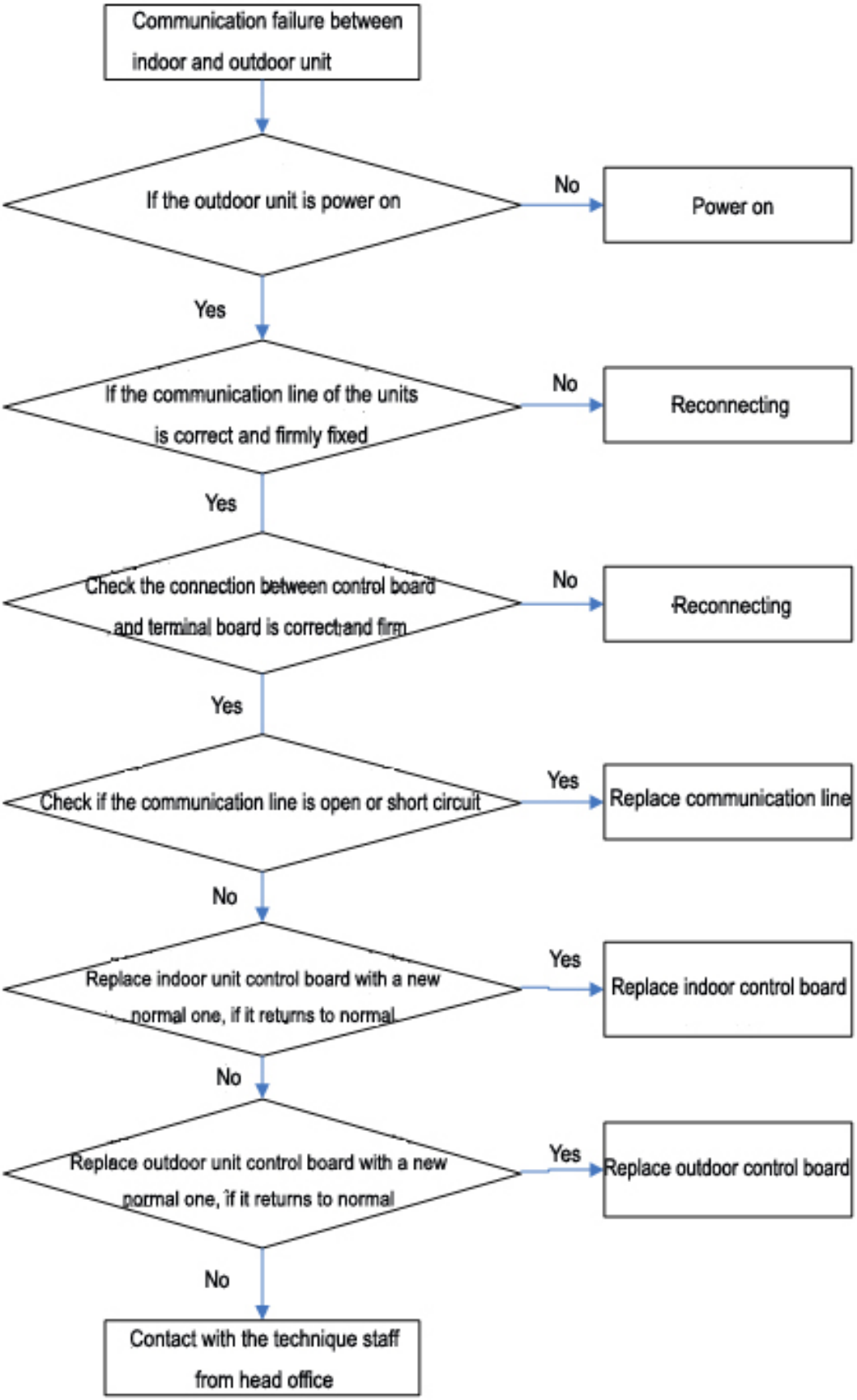

Outdoor protection(phase sequence)

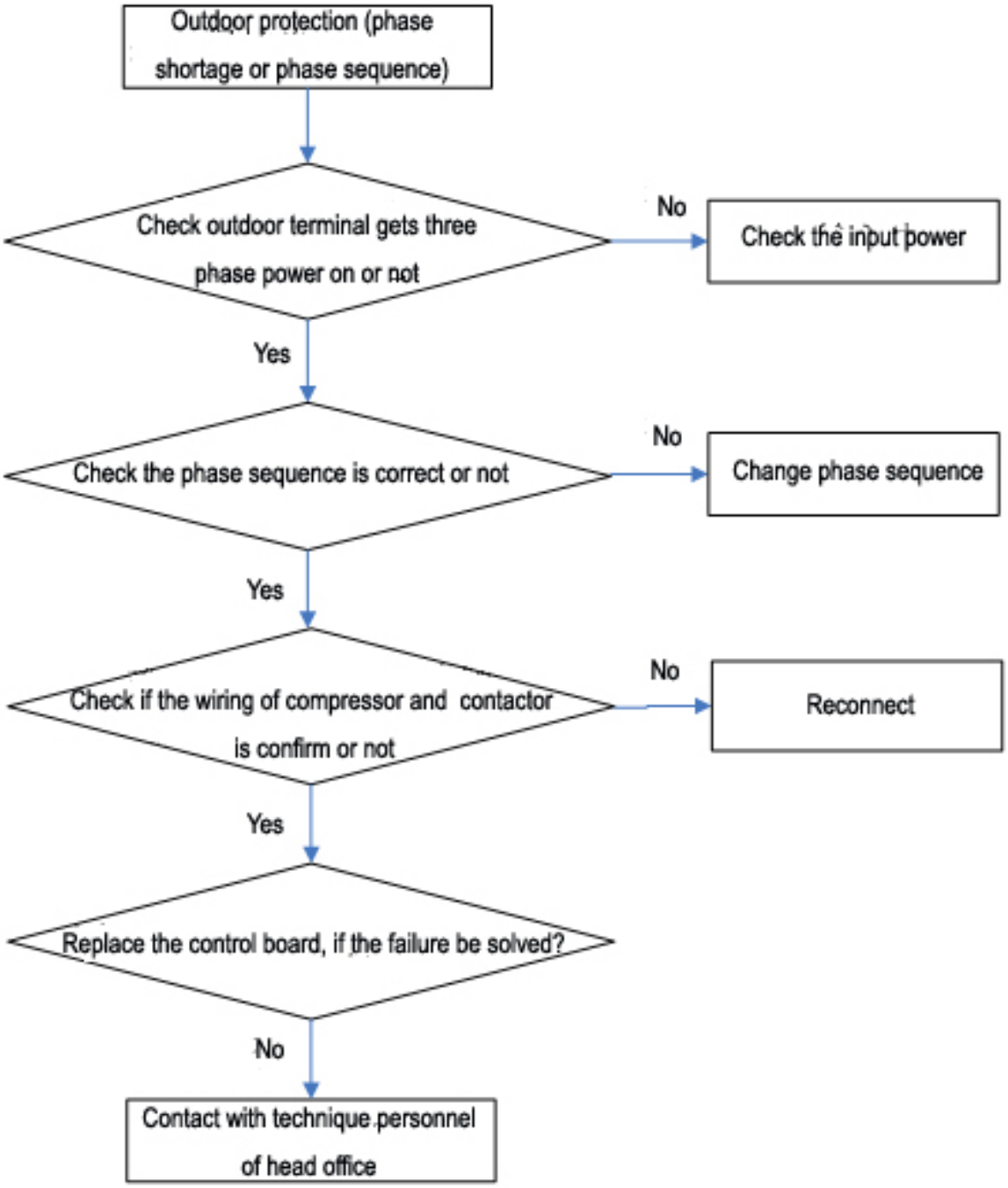

Cooling high pressure protection

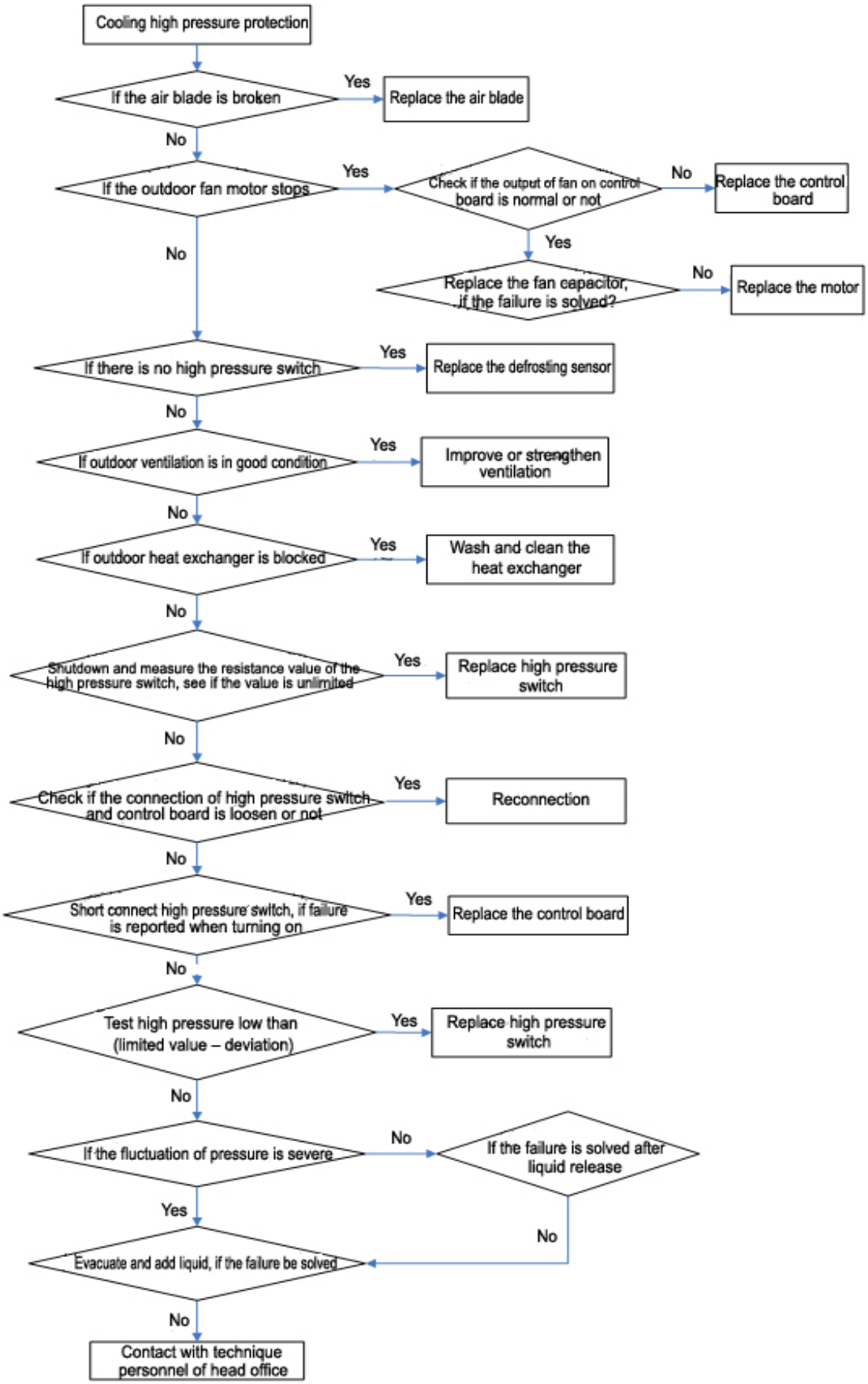

Heating high pressure protection

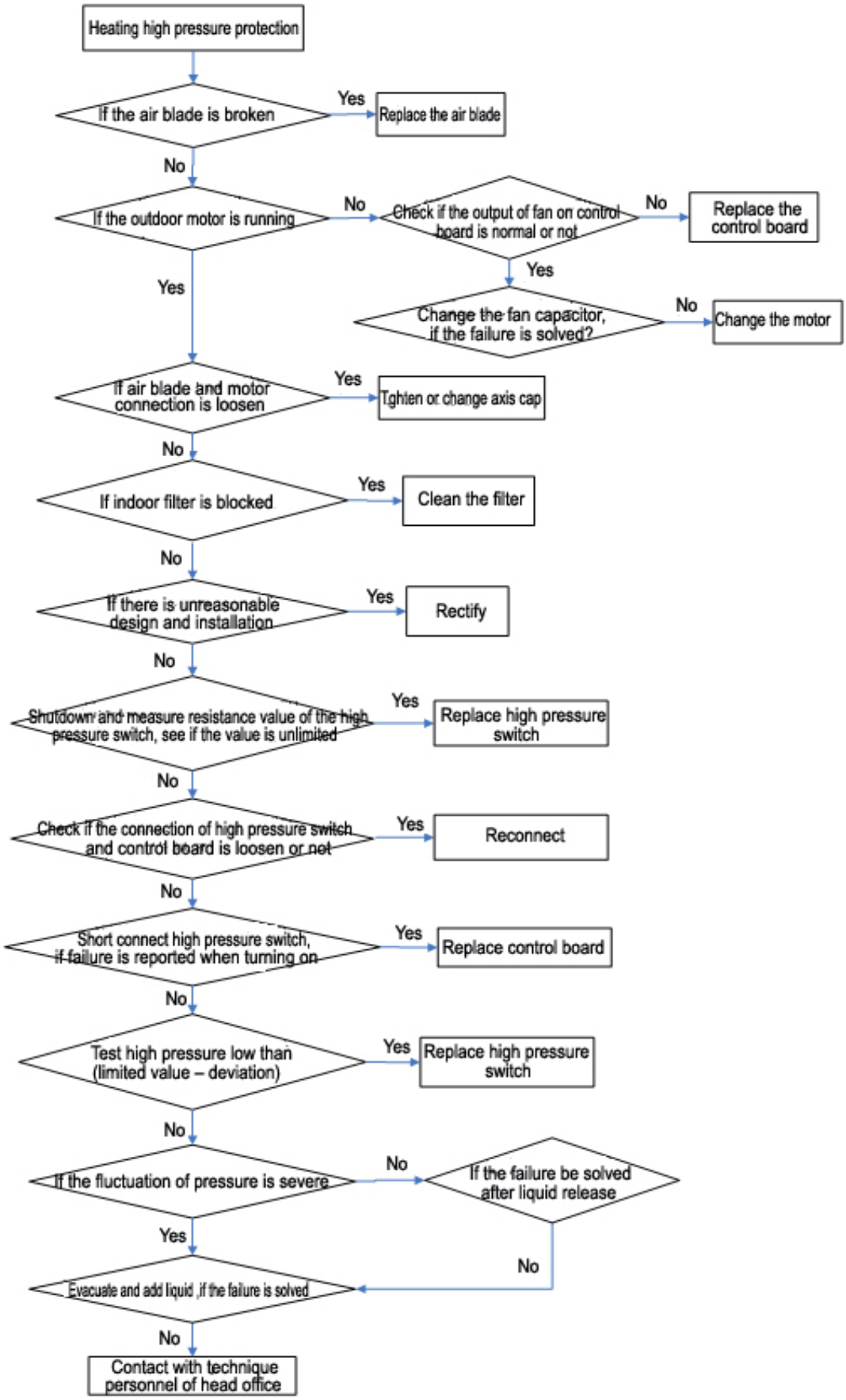

Cooling low pressure protection

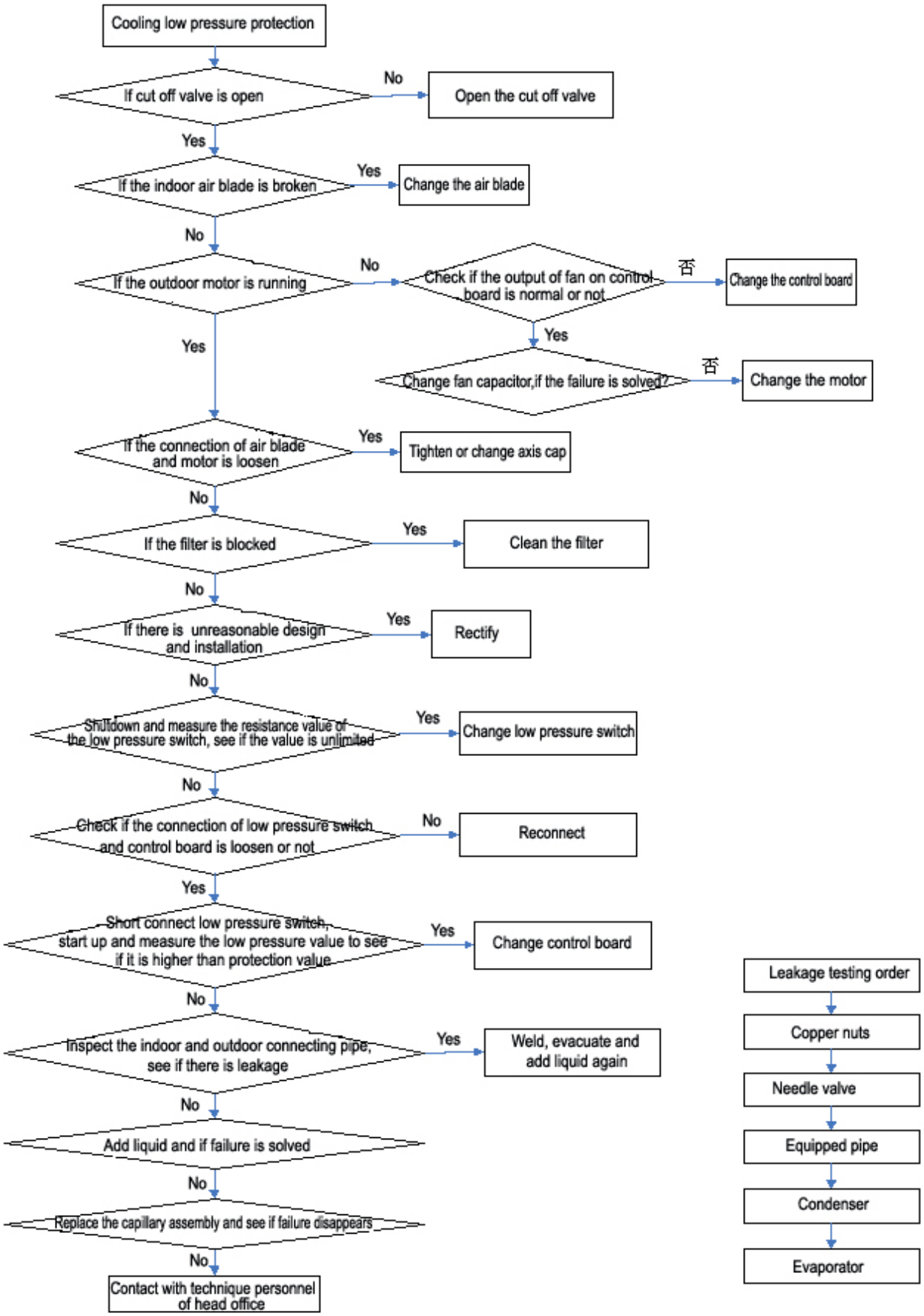

Heating low pressure protection

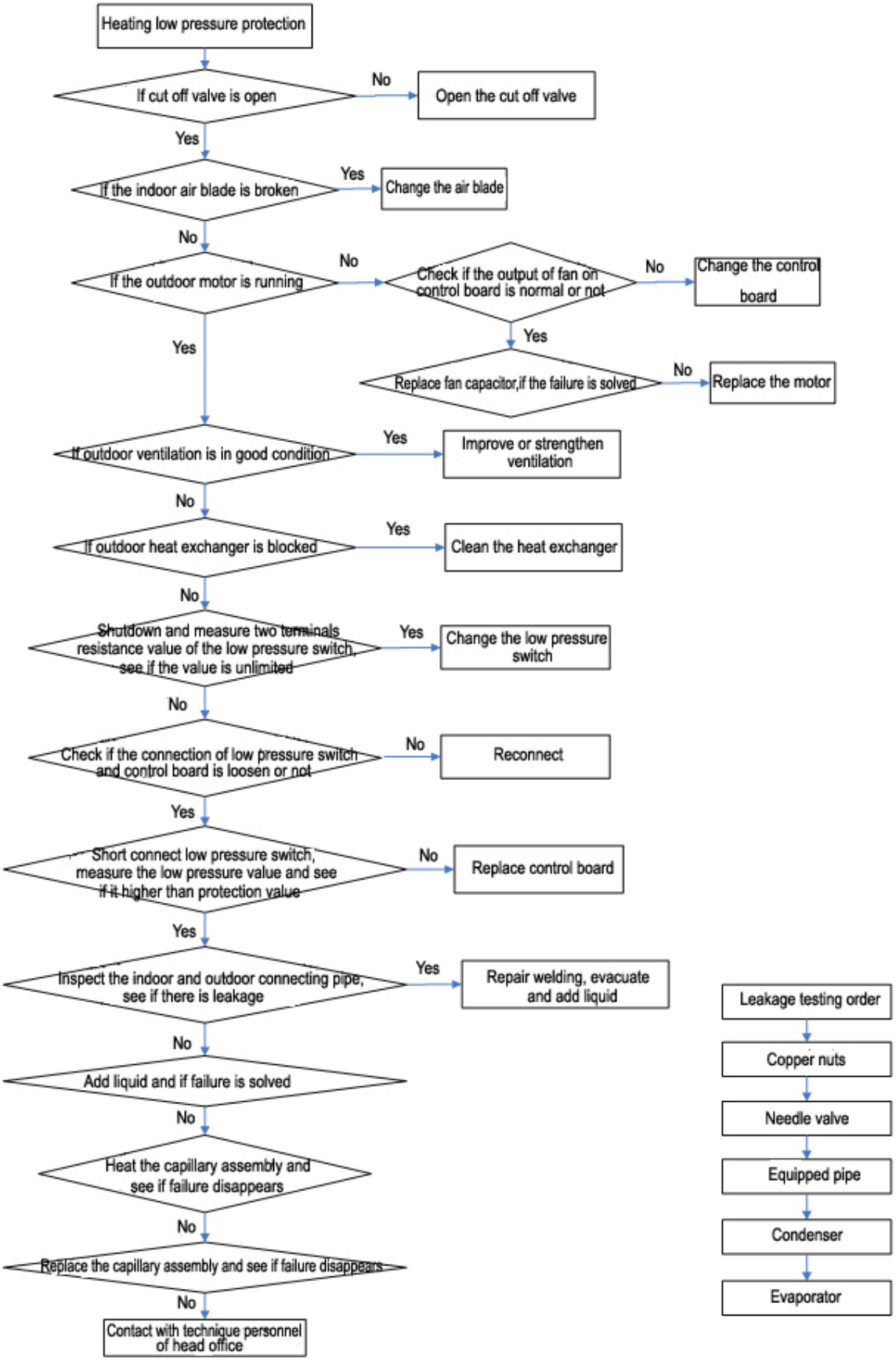

Cooling exhaust temperature protection

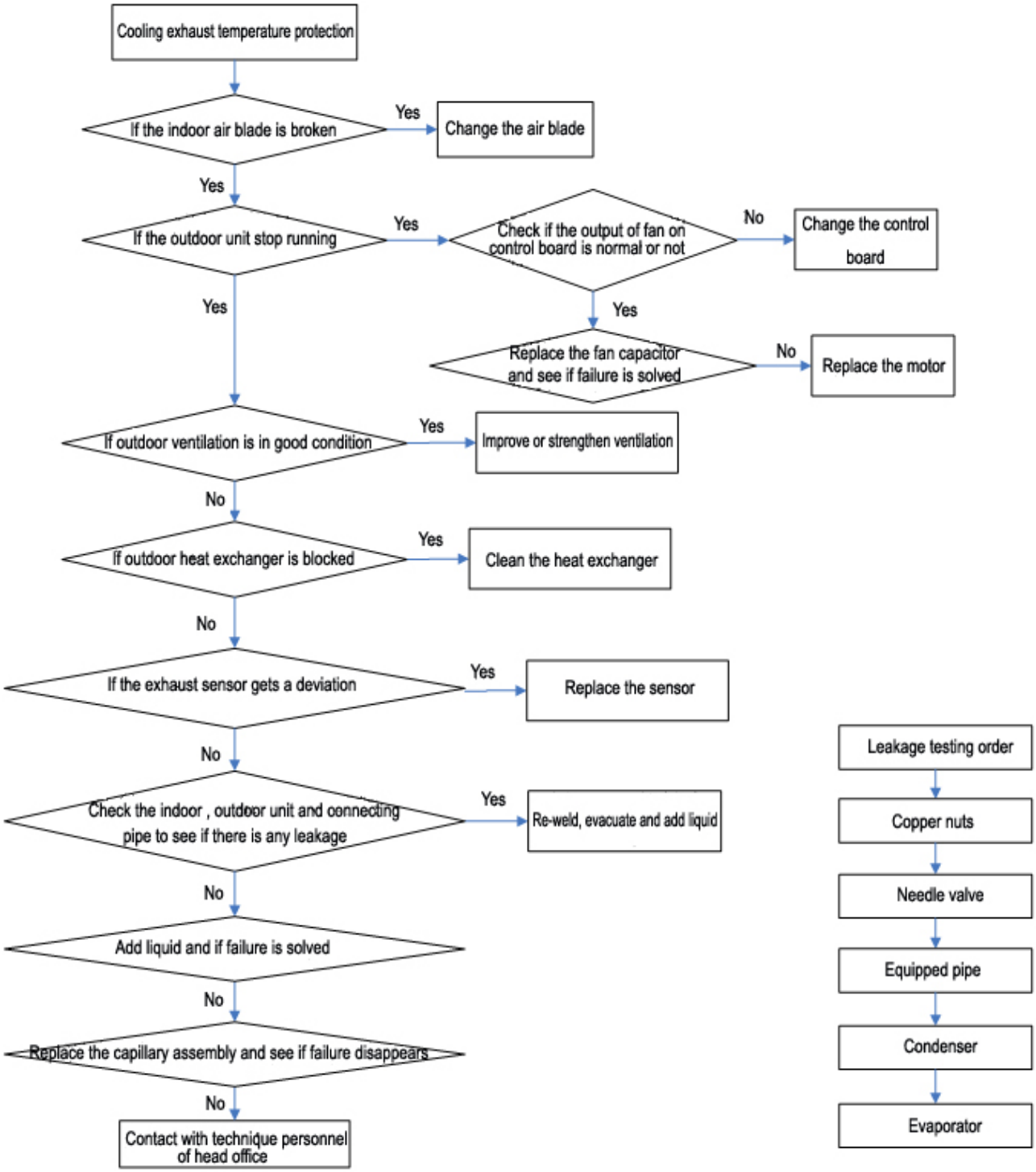

Heating exhaust temperature protection

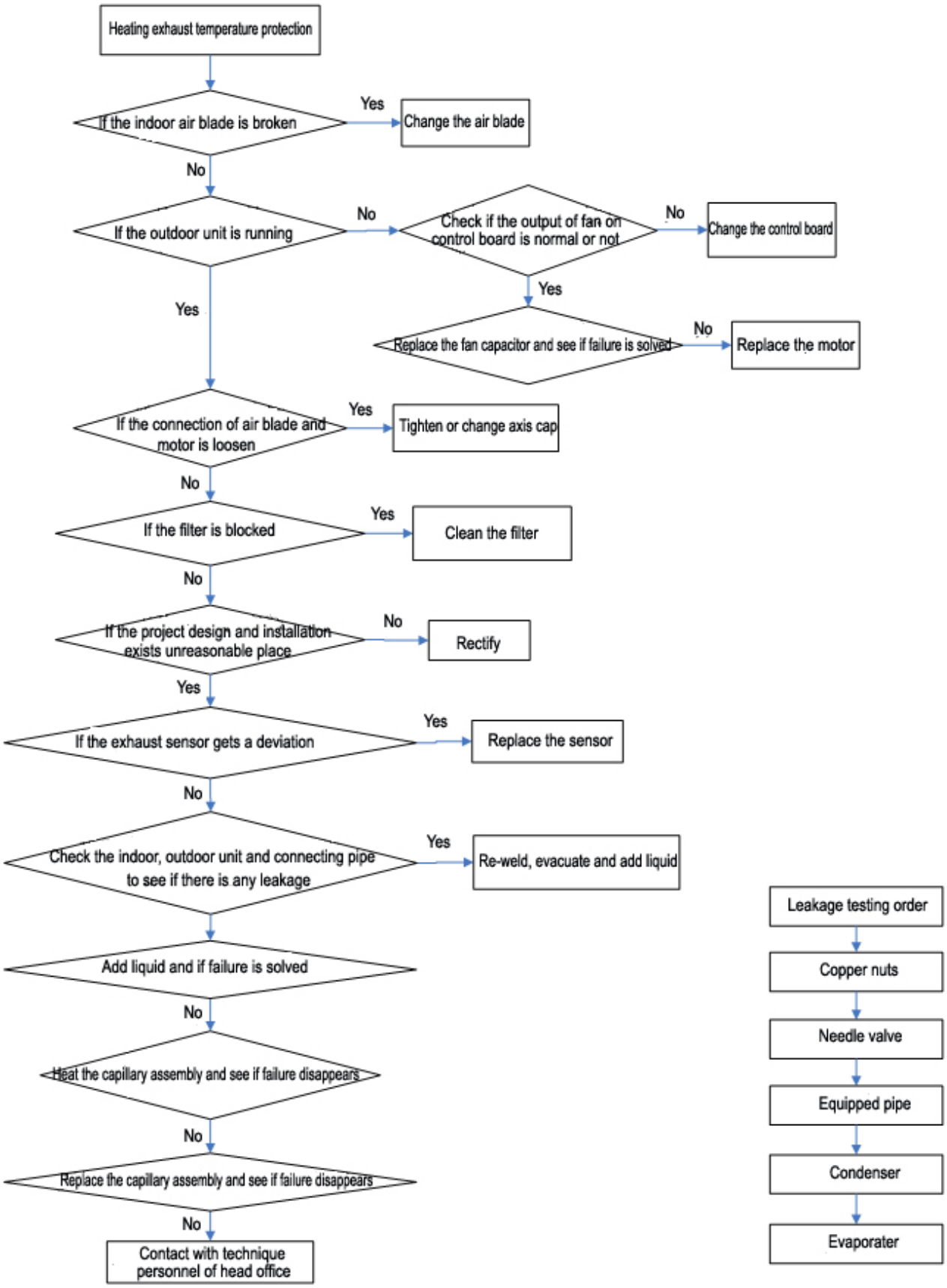

Refrigerant shortage or four way valve failure protection

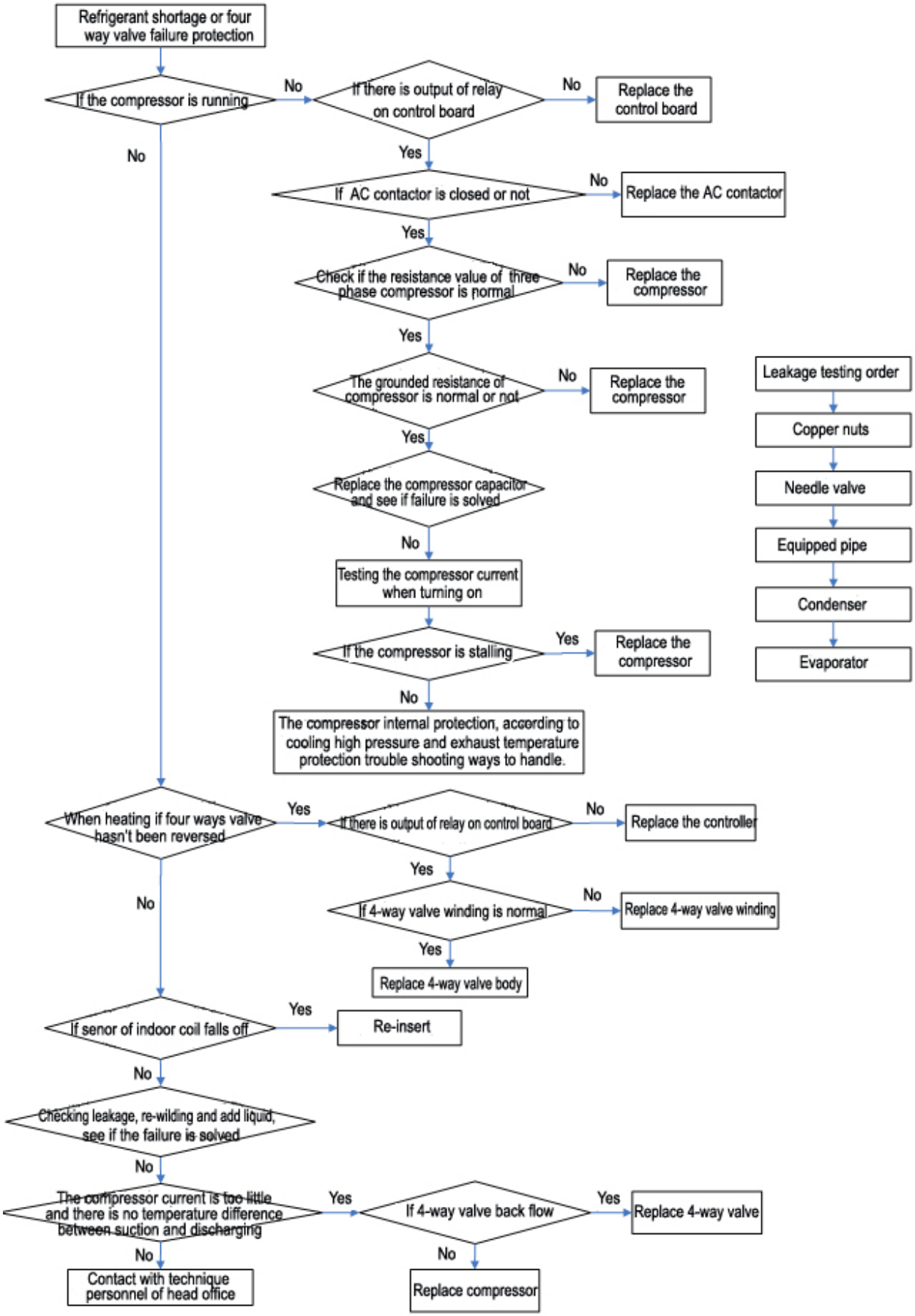

Sensor failure protection

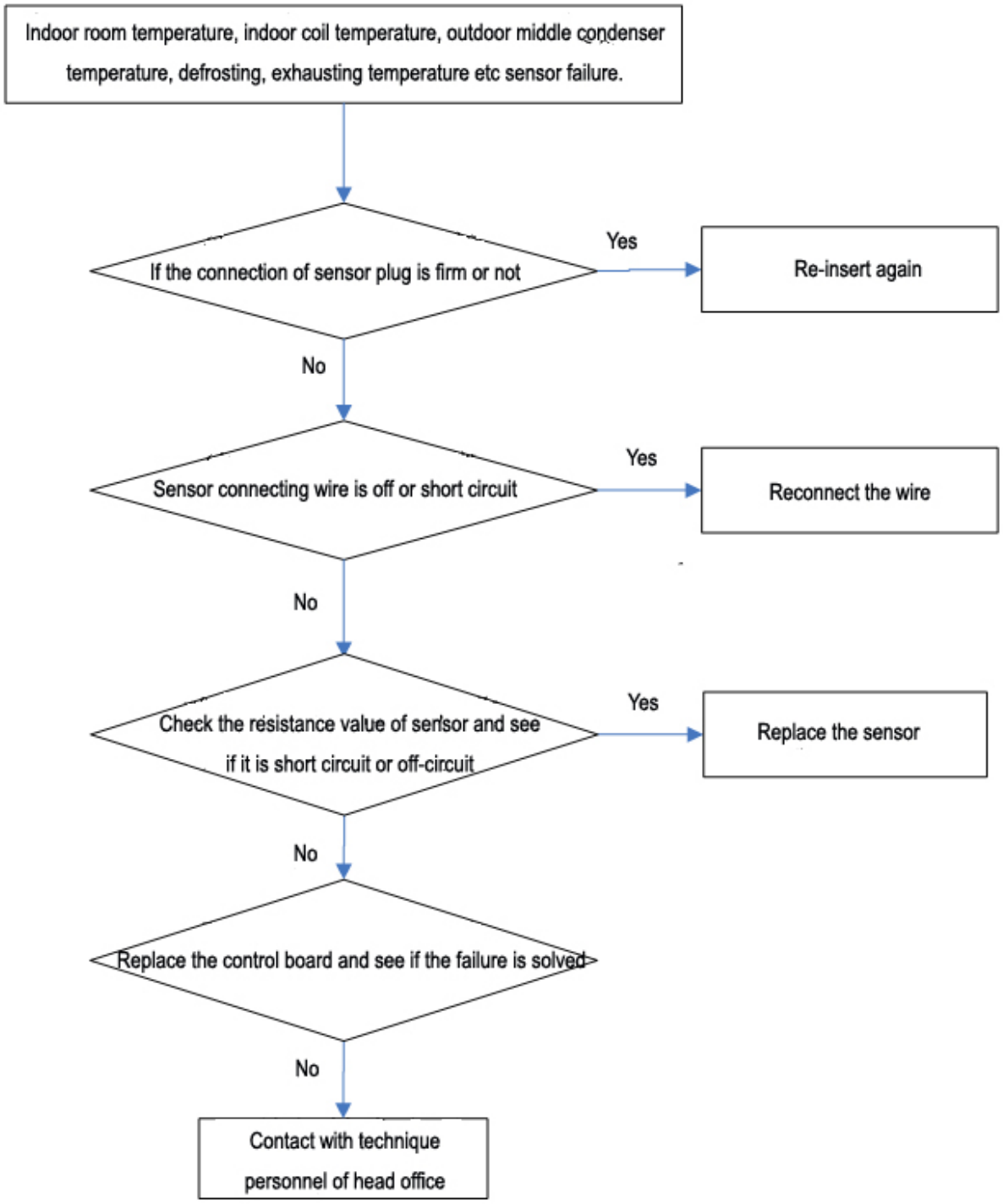

No action after power-on

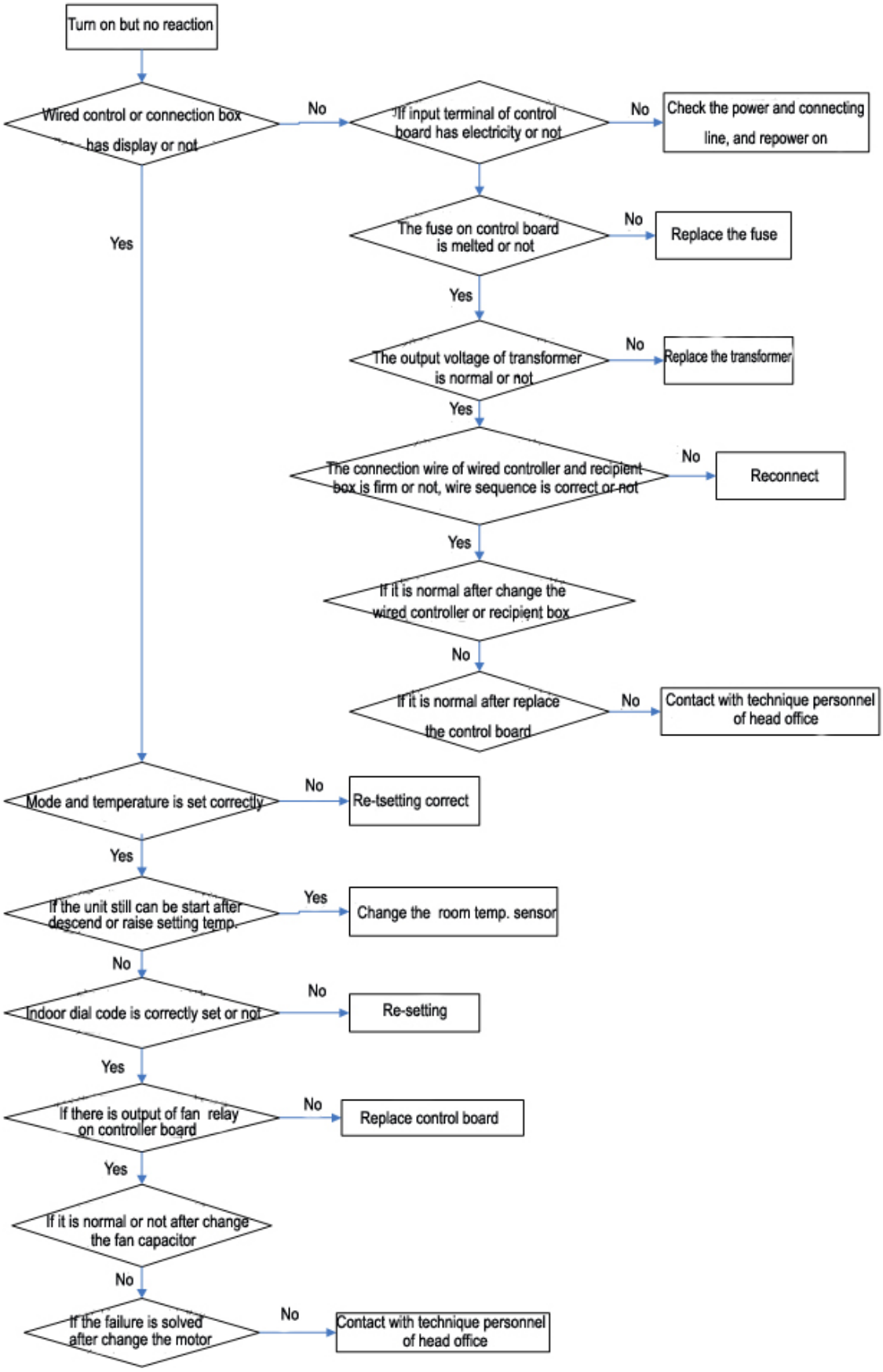

Poor effect

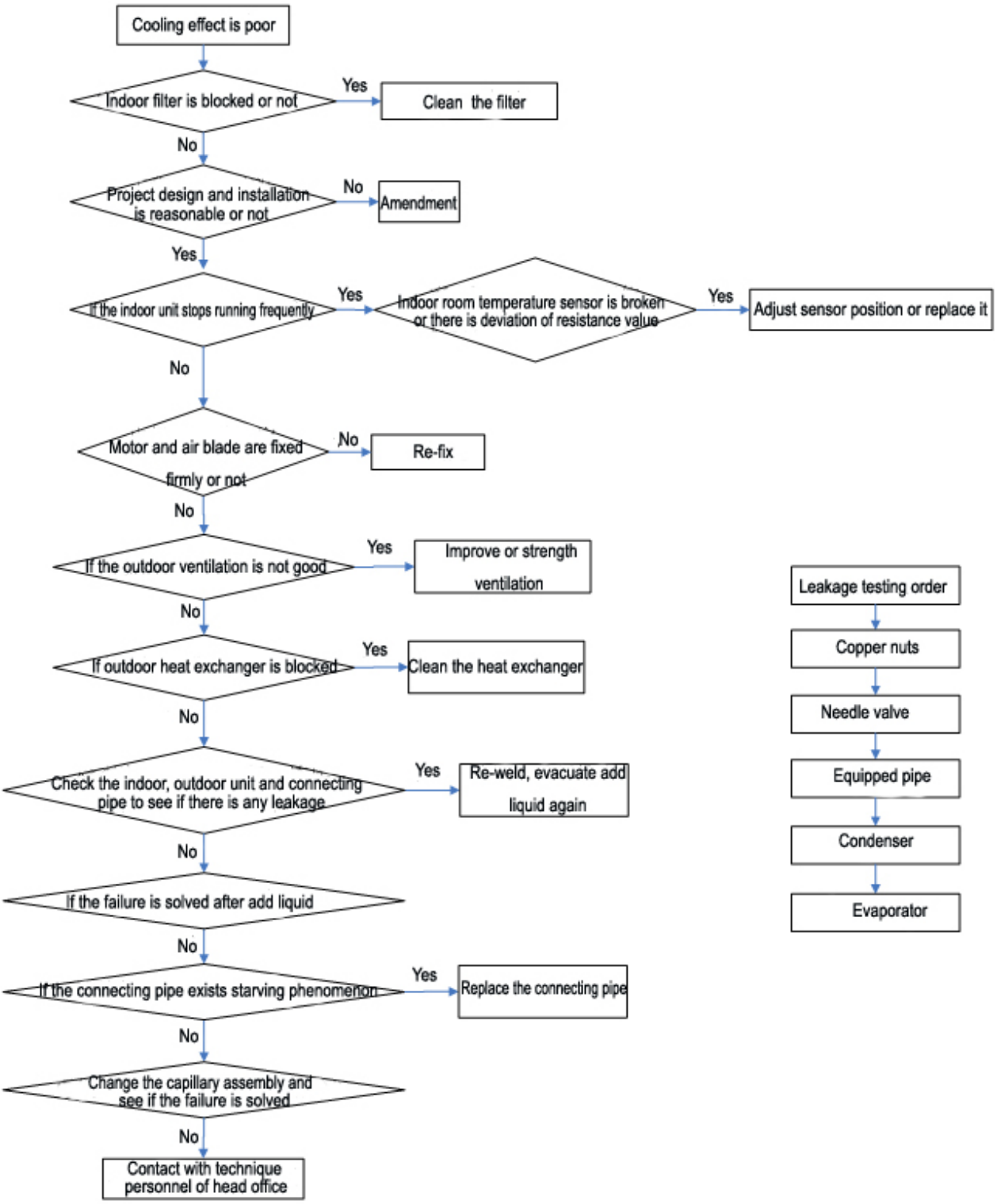
Cooling effect is poor
Indoor filter is blocked or not
Yes
Clean the filter
No
Project design and installation is reasonable or not
No
Amendment
Yes
If the indoor unit stops running frequently
Yes
Indoor room temperature sensor is broken or there is deviation of resistance value
Yes
Adjust sensor position or replace it
No
Motor and air blade are fixed firmly or not
No
Re-fix
No
If the outdoor ventilation is not good
Yes
Improve or strength ventilation
No
If outdoor heat exchanger is blocked
Yes
Clean the heat exchanger
No
Check the indoor, outdoor unit and connecting pipe to see if there is any leakage
Yes
Re-weld, evacuate add liquid again
No
If the failure is solved after add liquid
No
If the connecting pipe exists starving phenomenon
Yes
Replace the connecting pipe
No
Change the capillary assembly and see if the failure is solved
No
Contact with technique personnel of head office
Leakage testing order
Copper nuts
Needle valve
Equipped pipe
Condenser
Evaporator

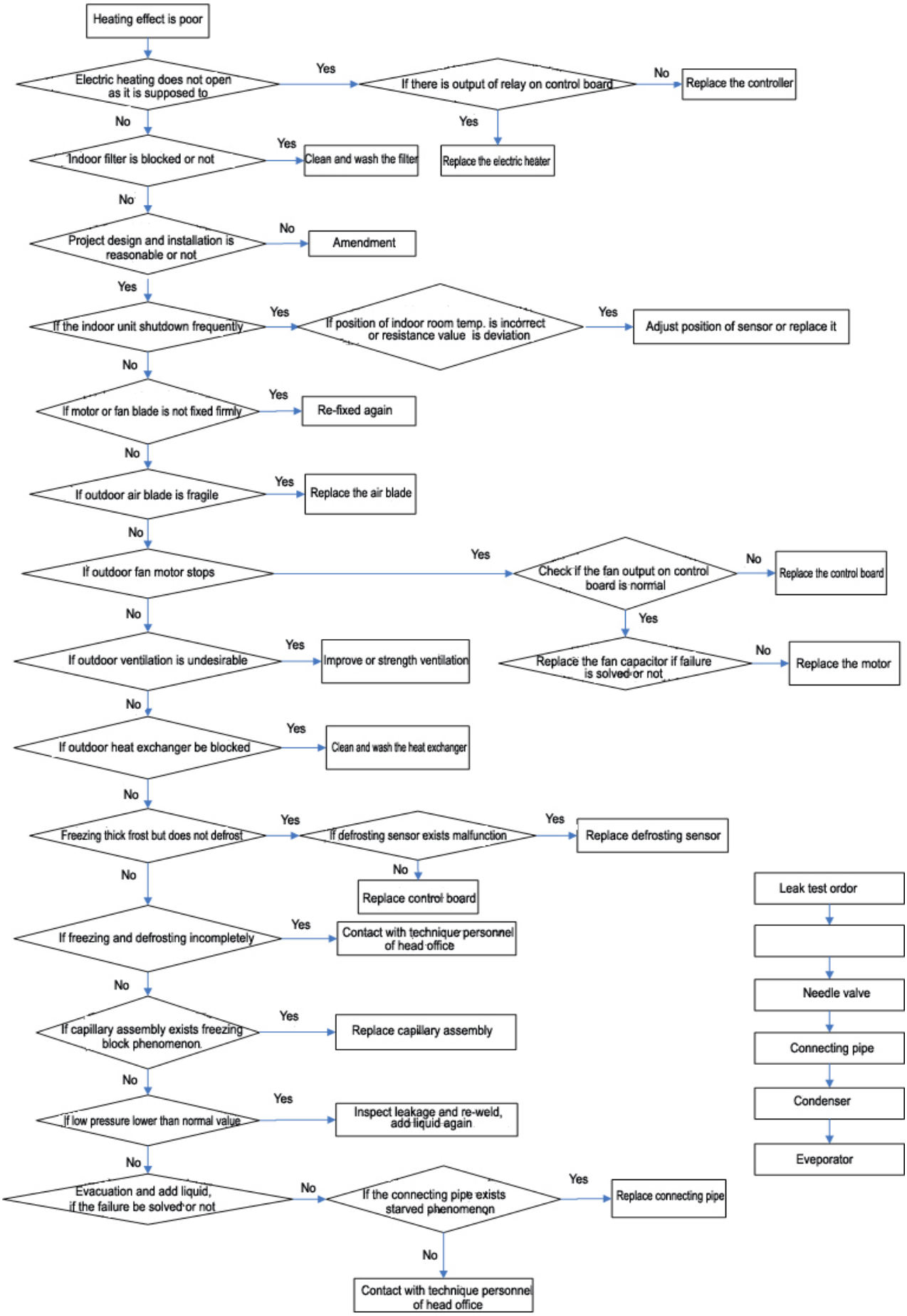
Heating effect is poor
Electric heating does not open as it is supposed to
Yes
If there is output of relay on control board
No
Replace the controller
Yes
Replace the electric heater
No
Indoor filter is blocked or not
Yes
Clean and wash the filter
No
Project design and installation is reasonable or not
No
Amendment
Yes
If the indoor unit shutdown frequently
Yes
If position of indoor room temp. is incorrect or resistance value is deviation
Yes
Adjust position of sensor or replace it
No
If motor or fan blade is not fixed firmly
Yes
Re-fixed again
No
If outdoor air blade is fragile
Yes
Replace the air blade
No
If outdoor fan motor stops
Yes
Check if the fan output on control board is normal
No
Replace the control board
Yes
Replace the fan capacitor if failure is solved or not
No
Replace the motor
No
If outdoor ventilation is undesirable
Yes
Improve or strength ventilation
No
If outdoor heat exchanger be blocked
Yes
Clean and wash the heat exchanger
No
Freezing thick frost but does not defrost
Yes
If defrosting sensor exists malfunction
Yes
Replace defrosting sensor
No
Replace control board
No
If freezing and defrosting incompletely
Yes
Contact with technique personnel of head office
No
If capillary assembly exists freezing block phenomenon
Yes
Replace capillary assembly
No
If low pressure lower than normal value
Yes
Inspect leakage and re-weld, add liquid again
No
Evacuation and add liquid, if the failure be solved or not
No
If the connecting pipe exists starved phenomenon
Yes
Replace connecting pipe
No
Contact with technique personnel of head office
Leak test ordor
Needle valve
Connecting pipe
Condenser
Eveporator

Abnormal sound or viberation

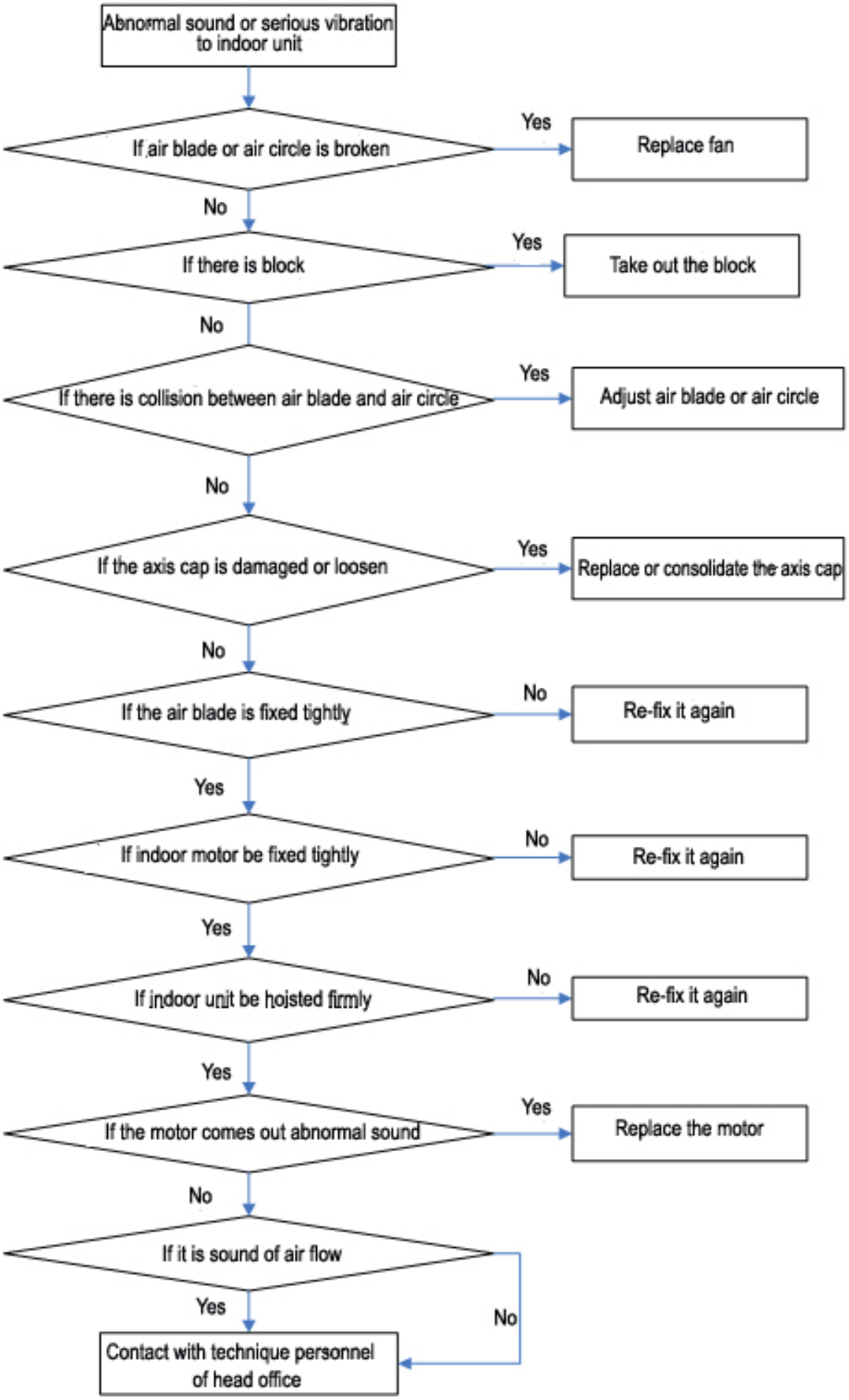

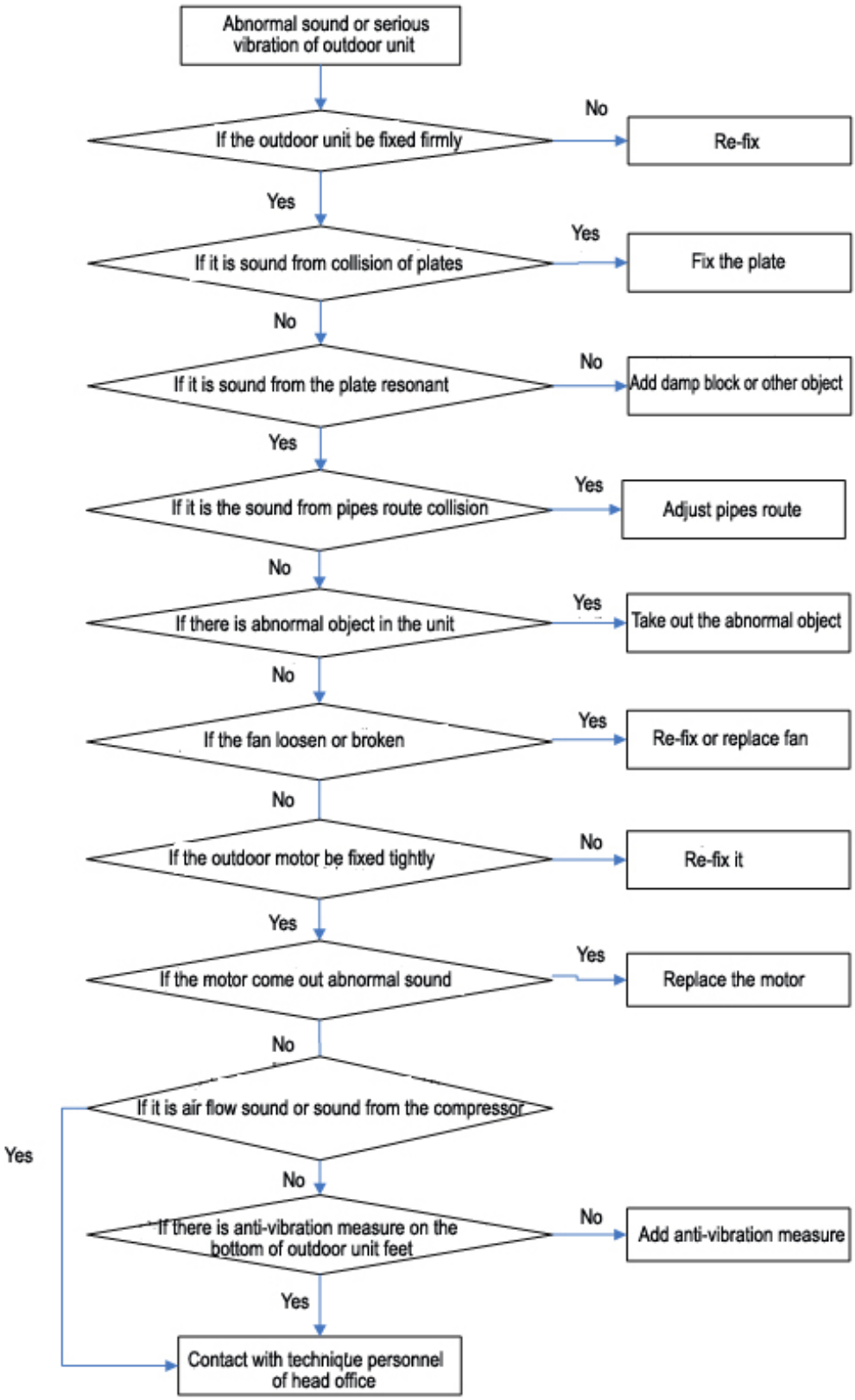
Abnormal sound or serious vibration of outdoor unit
If the outdoor unit be fixed firmly
No
Re-fix
Yes
If it is sound from collision of plates
Yes
Fix the plate
No
If it is sound from the plate resonant
No
Add damp block or other object
Yes
If it is the sound from pipes route collision
Yes
Adjust pipes route
No
If there is abnormal object in the unit
Yes
Take out the abnormal object
No
If the fan loosen or broken
Yes
Re-fix or replace fan
No
If the outdoor motor be fixed tightly
No
Re-fix it
Yes
If the motor come out abnormal sound
Yes
Replace the motor
No
If it is air flow sound or sound from the compressor
Yes
No
If there is anti-vibration measure on the bottom of outdoor unit feet
No
Add anti-vibration measure
Yes
Contact with technique personnel of head office

Abnormal odor

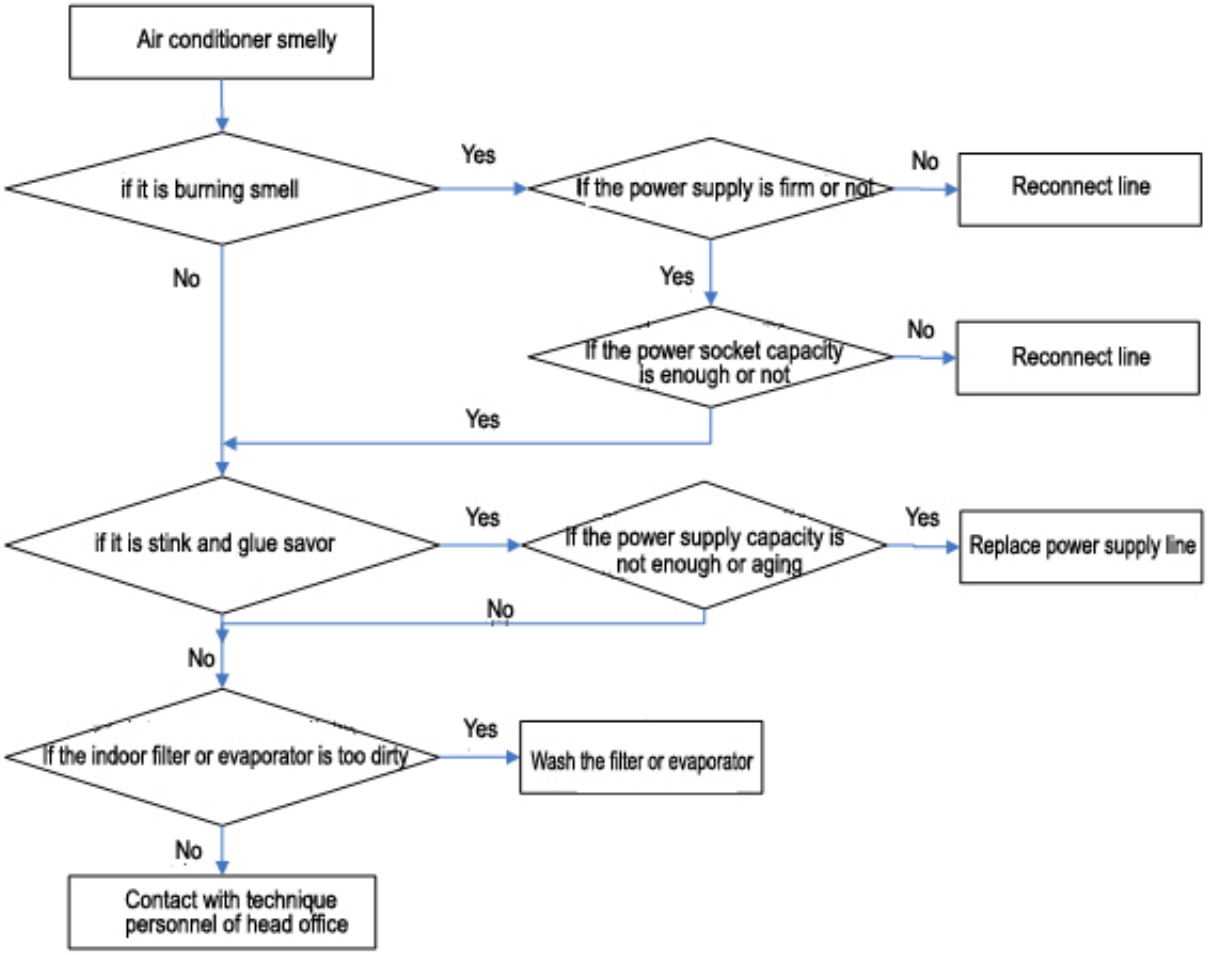

Air switch action when air conditioner starting up

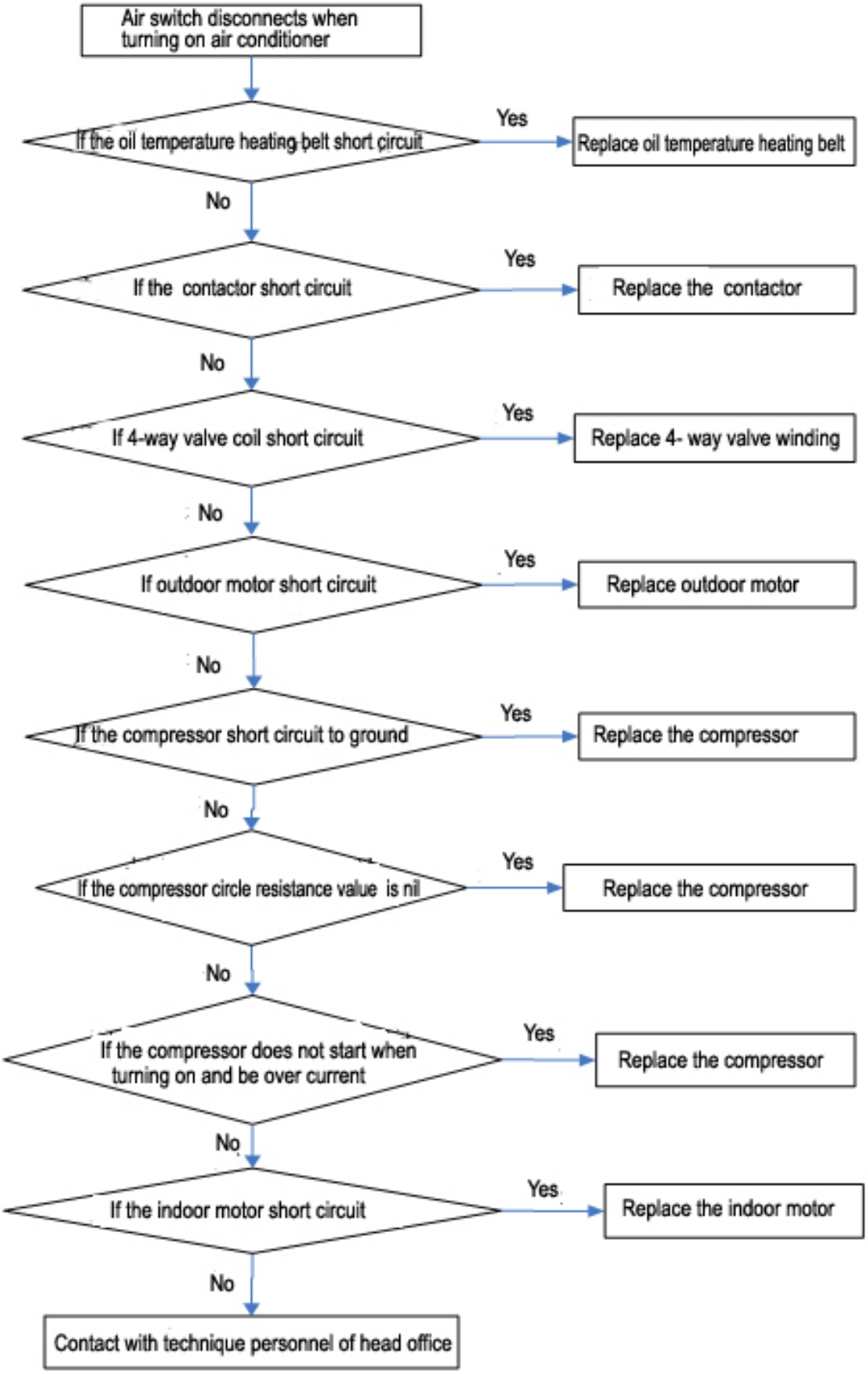

Air conditioner water leakage

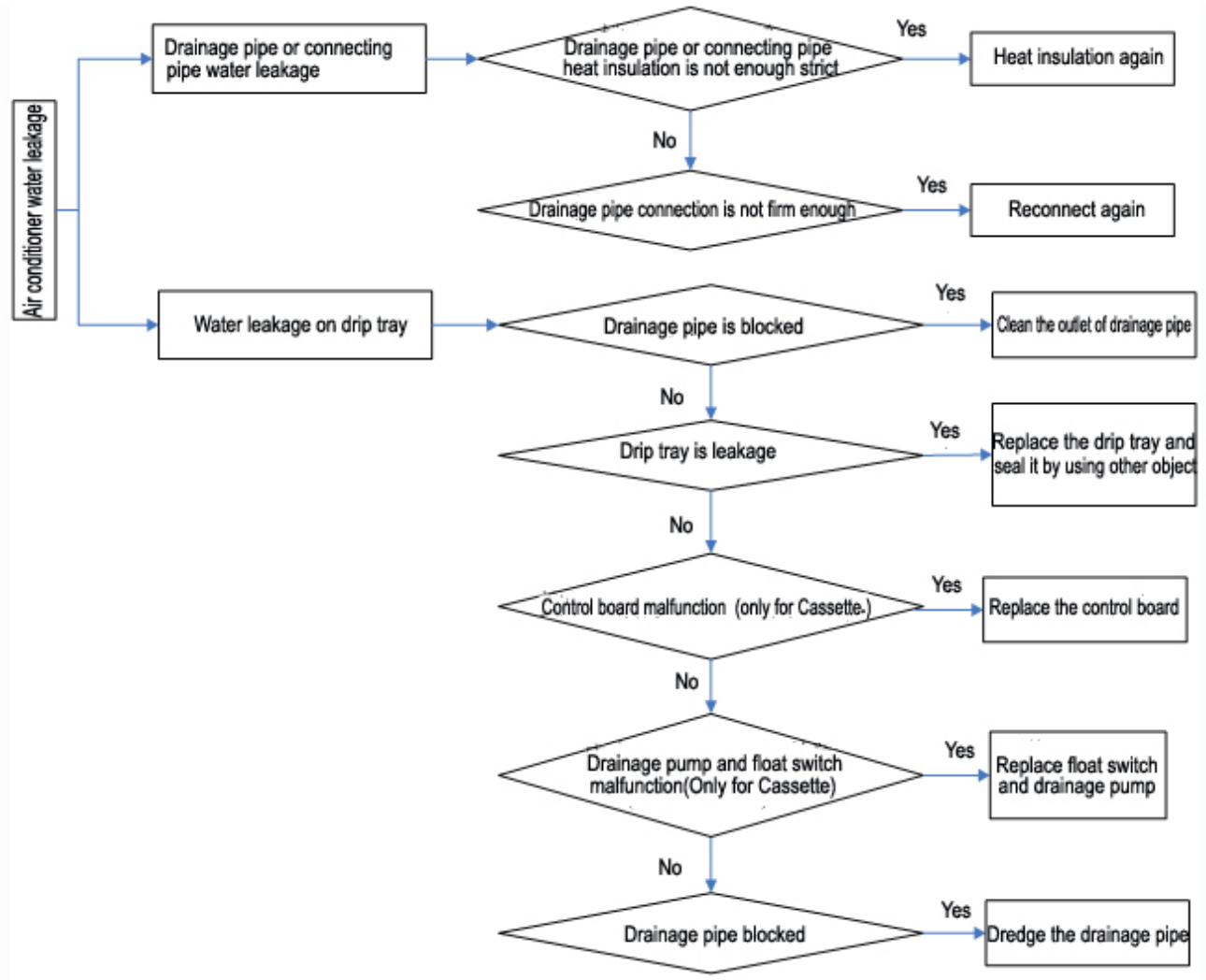

Part 5 Controller

1.General information

Remote controller, wired controller, display panel and receiver

Remote controller, wired controller, display panel and receiver					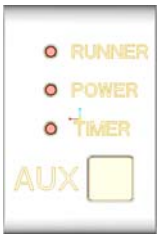
	Available for all models above	Available for all models above	Available for Cassette indoor unit	Available for Ceiling&Floor indoor unit	Available for Duct indoor unit
Note	For Cassette and Ceiling & Floor indoor unit, remote controller is standard and wired controller is optional. For Duct indoor unit wired controller is standard,remote controller is optional(remote controller receiver will be necessaryer).				

Remote controller's operation introduction

Basic condition of remote controller

Name	Figure	Basic condition for operation
Remote controller		1.Power source Use 2 pcs No 7 batteries,working voltage:2.0V-5.0V; 2. Signal frequency:infrared frequency 38kHz; 3. Remote distance:max working distance is7m。
		Key operation introduction: 1.Temperature setting range 16℃-32℃; 2. when heating:When indoor coil temp. is lower than request, the fan will change into low speed,. After the temp. reach to the request temp.,it will change into setting fan speed.

2. Function

Function

Remote conntroller: K series

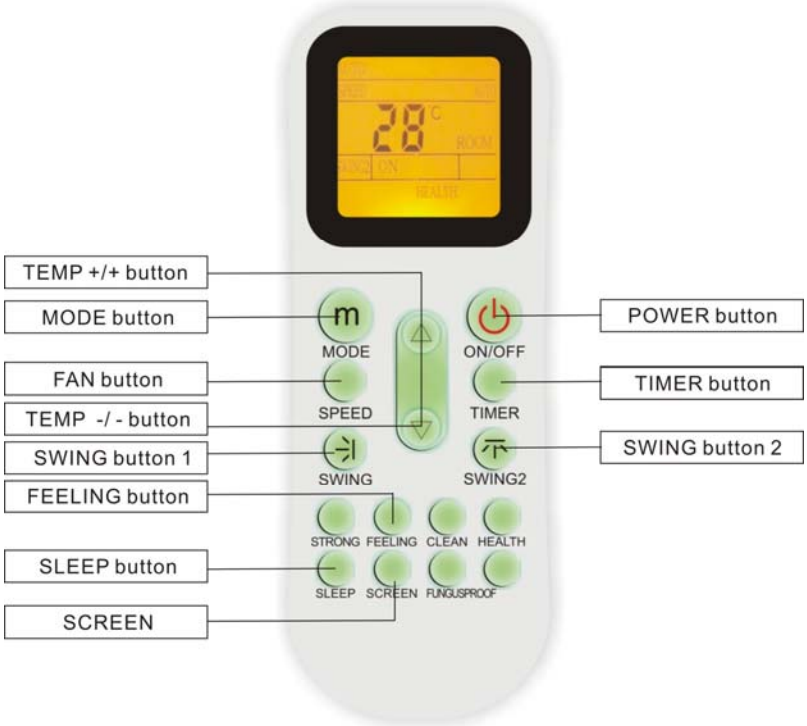

POWER button: Switch the unit ON/OFF.

MODE button: Select mode , push the button one time, then the operation modes will change in turn as Auto-Cooling-Dehumidify-Heating

TEMP + button and **TEMP - button**: Temperature adjustment range: 16~32

FAN button: Change the fan speed will change in turn as: Low-Medium-High-Auto

SWING button 1: Press this button for the first time when operation, it will start the up and down swing function. Push the button for the second time, cancel the swing function.
SWING button 2: Press this button for the first time when operation, it will start the right and left swing function. Push the button for the second time, cancel the swing function.

Feeing button: Press this button for setting the feeling function.The LCD shows the actual room temperature when the function set and it shows the setting temperature when the function cancelled.The function is invalid when the appliance at the fan mode.

TIMER/CLOCK button:
Clock Setting: Normally display the clock set currently (display 12:00 for the first electrifying or resetting). When press the button for 5 seconds, the time display zone will flicker, then press【+】 and 【-】 button and to adjust hour that uses 12-hour clock including “A.M.” and “P.M.” time; press the button again

to complete the setting.

Timer setting: Press the button to set TIMER ON/OFF , press the button then “ON” will flicker on the display screen. then press【+】 and 【-】 button and to adjust hour that uses 12-hour clock including “A.M.” and “P.M.” time; press the button again to complete the setting. The “OFF” setting is the same methods.

Remark: When setting functions such as mode, temperature, air port and air velocity, display screen displays all presetting parameters and remains constant; after reaching presetting time, air conditioner will automatically start as per presetting state.

After setting timing ON and OFF function, pressing button of 【Timer/Clock】can cancel timing setting.

SLEEP button:

1. Press the button to the sleeping indicator light of indoor unit flashes on;
2. After the setting of sleeping mode,the cooling operation enables the set temperature to increase 1℃ after 1 hour and another 1℃ auto matically after 1hour.
3. After the setting of sleeping mode,the heating operation enables the set temperature to drop 2℃ after 1 hour and another 2℃ auto matically after 1hour.
4. The air condition runs in sleeping mode for 7hours and stops automatically.

Remark:Press the mode or ON/OFF button,the remote controller clears sleeping mode away.

SCREEN button:Press the button to let the LCD display working or not by pressing the button.

Remote conntroller:H series

LCD display instruction

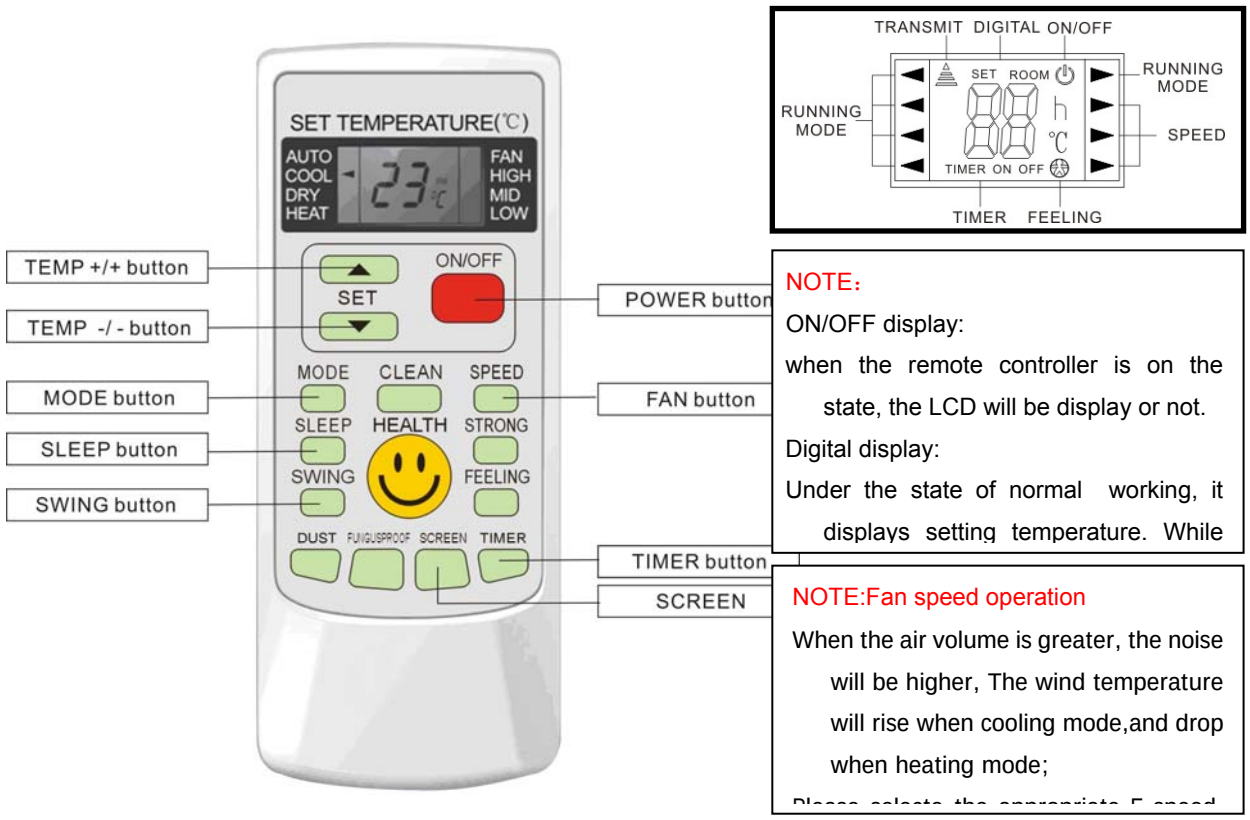

POWER button: Switch the unit ON/OFF.

MODE button: Select mode , push the button one time, then the operation modes will change in turn as Auto-Cooling-Dehumidify-Heating
TEMP + button and **TEMP - button**: Temperature adjustment range: 16~32

FAN button: Change the fan speed will change in turn as: Low-Medium-High-Auto

SWING button: Press this button for the first time when operation, it will start the swing function. Push the button for the second time, cancel the swing function. (The function is available matched with the concerned unit)

TIMER/CLOCK button:
Clock Setting: Normally display the clock set currently (display 12:00 for the first electrifying or resetting). When press the button for 5 seconds, the time display zone will flicker, then press【+】 and 【-】 button and to adjust hour that uses 12-hour clock including “A.M.” and “P.M.” time; press the button again to complete the setting.
Timer setting: Press the button to set TIMER ON/OFF , press the button then “ON” will flicker on the display screen. then press【+】 and 【-】 button and to adjust hour that uses 12-hour clock including “A.M.” and “P.M.” time; press the button again to complete the setting. The “OFF” setting is the same methods.
Remark: When setting functions such as mode, temperature, air port and air velocity, display screen displays all presetting parameters and remains constant; after reaching presetting time, air conditioner will automatically start as per presetting state.
After setting timing ON and OFF function, pressing button of 【Timer/Clock】can cancel timing setting.

SLEEP button:
1. Press the button to the sleeping indicator light of indoor unit flashes on;
2. After the setting of sleeping mode,the cooling operation enables the set temperature to increase 1℃ after 1 hour and another 1℃ auto matically after 1hour.
3. After the setting of sleeping mode,the heating operation enables the set temperature to drop 2℃ after 1 hour and another 2℃ auto matically after 1hour.
4. The air condition runs in sleeping mode for 7hours and stops automatically.

Remark: Press the mode or ON/OFF button,the remote controller clears sleeping mode away.

SCREEN button:Press the button to let the LCD display working or not by pressing the button.

Remote conntroller:F series

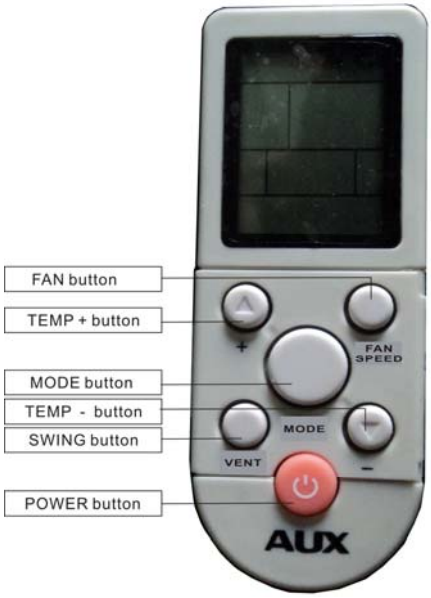

POWER button: Switch the unit ON/OFF.

MODE button: Select mode , push the button one time, then the operation modes will change in turn as Auto-Cooling-Dehumidify-Heating

TEMP + button and **TEMP - button**: Temperature adjustment range: 16~32

FAN button: Change the fan speed will change in turn as: Low-Medium-High-Auto

SWING button: Press this button for the first time when operation, it will start the swing function. Push the button for the second time, cancel the swing function. (The function is available matched with the concerned unit)

TIMER/CLOCK button:
Clock Setting: Normally display the clock set currently (display 12:00 for the first electrifying or resetting). When press the button for 5 seconds, the time display zone will flicker, then press【+】 and 【-】 button and to adjust hour that uses 12-hour clock including “A.M.” and “P.M.” time; press the button again to complete the setting.

Timer setting: Press the button to set TIMER ON/OFF , press the button then “ON” will flicker on the display screen. then press【+】 and 【-】 button and to adjust hour that uses 12-hour clock including “A.M.” and “P.M.” time; press the button again to complete the setting. The “OFF” setting is the same methods.
Remark: When setting functions such as mode, temperature, air port and air velocity, display screen displays all presetting parameters and remains constant; after reaching presetting time, air conditioner will automatically start as per presetting state.
After setting timing ON and OFF function, pressing button of 【Timer/Clock】can cancel timing setting.

SLEEP button:

1. Press the button to the sleeping indicator light of indoor unit flashes on;
2. After the setting of sleeping mode,the cooling operation enables the set temperature to increase 1℃ after 1 hour and another 1℃ auto matically after 1hour.
3. After the setting of sleeping mode,the heating operation enables the set temperature to drop 2℃ after 1 hour and another 2℃ auto matically after 1hour.
4. The air condition runs in sleeping mode for 7hours and stops automatically.

Remark: Press the mode or ON/OFF button,the remote controller clears sleeping mode away.

3 Wired controller

3.1 Basic condition of wired controller

Name	Figure	Basic condition for operation
Wired controller		1. Power source:voltage DC 12V; 2. Work temperature range of PCB:(-10~+70)℃; 3. Work humidity range of PCB:RH20%~RH90%;

3.2 Function

Wired controller: XK-01

ON/OFF button: Switch the unit ON/OFF.

Mode button: Select mode , push the button one time, then the operation modes will change in turn as below: Auto-Cooling-Dehumidify-Heating

Temp + button and Temp - button: Press the button can adjust temperature. Temperature adjustment range: 16~32℃.

Fan button: Change the fan speed will change in turn as :Auto-Low-Medium-High-Auto

Lock button: Press Temp + button and Temp - button meantime.

Remote receving: Receving signal of remote controller.

Notes: Virtually all functions of the wired controller are the same as those of the remote controller and you should refer to the remote controller instructions.

Wired controller: XK-02

ON/OFF button: Switch the unit ON/OFF.

Mode button: Select mode , push the button one time, then the operation modes will change in turn as below: Auto-Cooling-Dehumidify-Heating

Temp +/- button: Press the button can adjust temperature. Temperature adjustment range: 16~32℃.

Fan button: Change the fan speed will change in turn as :Auto-Low-Medium-High-Auto

Swing button: Press this button for the first time when operation, it will start the swing function. Push the button for the second time, cancel the swing function. (The function is available matched with the concerned unit)

Health button: Press this button change to switch mode: Health mode.

SLEEP button:

1. Press the button to the sleeping indicator light of indoor unit flashes on;
2. After the setting of sleeping mode,the cooling operation enables the set temperature to increase 1℃

after 1 hour and another 1℃ auto matically after 1hour.

3. After the setting of sleeping mode,the heating operation enables the set temperature to drop 2℃ after 1 hour and another 2℃ auto matically after 1hour.
4. The air condition runs in sleeping mode for 7hours and stops automatically.

Remark: Press the mode or ON/OFF button,the remote controller clears sleeping mode away.

Timer button: Press the button to set Timer ON/OFF, press the button then “ON” will flicker on the display screen. then press【Clock +/- button】and to adjust hour that uses 12-hour clock including “A.M.” and “P.M.” time; press the button again to complete the setting. The “OFF” setting is the same methods.

Remark: When setting functions such as mode, temperature, swing and fan speed, display screen displays all presetting parameters and remains constant; after reaching presetting time, air conditioner will automatically start as per presetting state.

After setting timing ON and OFF function, pressing button of 【Timer】can cancel timing setting.

Notes:

1. Time sequence of timing ON and OFF determines the order of “Timing ON-Timer OFF” and “Timer OFF- Timing ON”. If the both are the same or either one is the same as time of current clock, it is invalid to press “Timer” button to confirm presetting time; after it reaches the presetting time, it will implement corresponding timing operation.
2. After setting time of timing ON and OFF, pressing “Timer” button can cancel timing.
3. Enter into time setting state of timing function; if there is no input related to time within consecutive 10 seconds, cancel the operation, return to previous state and go on with current time.
4. Default time of timer ON is 08:00 and default time of timer OFF is 18:00.

3.3 Installation of wired controller

◇First, take apart the base panel from the wired controller.;

◇According to the two installation holes on the install board, use two screws to fix the base panel to the wall as shown below;

◇Ensure that the connecting cable of the controller is accessible before connecting the wired controller to the base panel.;

◇Join the wired controller connection cable to the indoor unit using the cable provided.

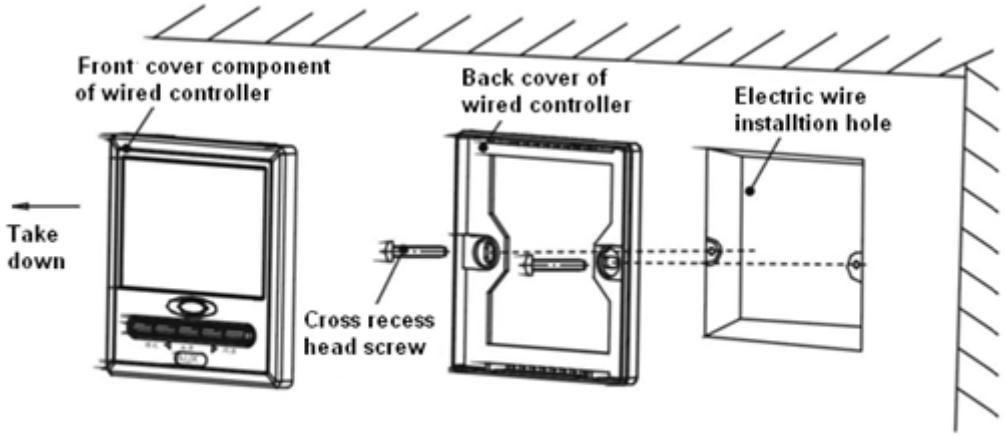

Part 6. Sensor resistance table

Coil and environment temperature sensor 5K3470 resistance reference table

Coil and environment temperature sensor 5K3470					
Tx(℃)	Average (KΩ)	Tx(℃)	Average (KΩ)	Tx(℃)	Average (KΩ)
-20	72.99	21	5.854	61	1.421
-19	35.16	22	5.626	62	1.376
-18	33.43	23	5.408	63	1.334
-17	31.80	24	5.199	64	1.293
-16	30.26	25	5.000	65	1.254
-15	28.80	26	4.811	66	1.215
-14	27.42	27	4.630	67	1.179
-13	26.12	28	4.456	68	1.143
-12	24.88	29	4.291	69	1.109
-11	23.71	30	4.132	70	1.076
-10	22.60	31	3.980	71	1.044
-9	21.55	32	3.835	72	1.013
-8	20.56	33	3.695	73	0.9837
-7	19.61	34	3.562	74	0.9550
-6	18.72	35	3.434	75	0.9273
-5	17.87	72	3.311	76	0.9005
-4	17.06	37	3.193	77	0.8746
-3	16.30	38	3.081	78	0.8496
-2	15.57	39	2.972	79	0.8254
-1	14.88	40	2.869	80	0.8021
0	14.23	41	2.769	81	0.779
1	13.60	42	2.673	82	0.758
2	13.01	43	2.581	83	0.737
3	12.45	44	2.493	84	0.716
4	11.91	45	2.409	85	0.696
5	11.40	46	2.307	86	0.677
6	10.92	47	2.249	87	0.658
7	10.46	48	2.174	88	0.641
8	10.02	49	2.102	89	0.623
9	9.596	50	2.032	90	0.606
10	9.197	72	1.965	91	0.590
11	8.817	52	1.901	92	0.574
12	8.454	53	1.839	93	0.559
13	8.108	54	1.780	94	0.544
14	7.779	55	1.722	95	0.530
15	7.464	56	1.667	96	0.726
16	7.164	57	1.614	97	0.502

17	6.877	58	1.563	98	0.489
18	6.603	59	1.724	99	0.476
19	6.342	60	1.466	100	0.464
20	6.092				

Exhaust temperature sensor 6.339K3954

Exhaust temperature sensor R80：6.339KΩ±1% B25/80=3954K±1%							
T [℃]	Rmin [KΩ]	T [℃]	Rmin [KΩ]	T [℃]	Rmin [KΩ]	T [℃]	Rmin [KΩ]
-20	440.7	20	60.42	60	12.32	100	3.377
-19	417.0	21	57.79	61	11.89	101	3.279
-18	394.7	22	55.29	62	11.48	102	3.184
-17	373.7	23	52.91	63	11.08	103	3.093
-16	353.9	24	50.65	64	10.70	104	3.003
-15	335.2	25	48.49	65	10.34	105	2.918
-14	317.7	26	46.44	66	9.992	106	2.836
-13	301.2	27	44.49	67	9.652	107	2.755
-12	285.6	28	42.64	68	9.328	108	2.678
-11	271.0	29	40.88	69	9.017	109	2.603
-10	257.1	30	39.19	70	8.717	110	2.530
-9	244.0	31	37.59	71	8.428	111	2.460
-8	231.7	32	36.06	72	8.152	112	2.392
-7	220.0	33	34.59	73	7.885	113	2.326
-6	209.0	34	33.21	74	7.628	114	2.262
-5	198.6	35	31.88	75	7.381	115	2.201
-4	188.7	36	30.60	76	7.143	116	2.141
-3	179.4	37	29.39	77	6.914	117	2.083
-2	170.7	38	28.23	78	6.693	118	2.026
-1	162.4	39	27.13	79	6.480	119	1.972
0	154.5	40	26.07	80	6.276	120	1.920
1	147.1	41	25.06	81	6.075	121	1.868
2	140.0	42	24.09	82	5.881	122	1.819
3	133.3	43	23.17	83	5.694	123	1.772
4	127.1	44	22.29	84	5.514	124	1.725
5	121.1	45	21.44	85	5.340	125	1.680
6	115.4	46	20.64	86	5.175	126	1.636
7	109.9	47	19.86	87	5.014	127	1.594
8	104.9	48	19.13	88	4.859	128	1.552
9	100.0	49	18.42	89	4.711	129	1.513
10	95.43	50	17.74	90	4.567	130	1.475
11	91.07	51	17.09	91	4.429	131	1.437
12	86.93	52	16.46	92	4.294	132	1.401
13	83.00	53	15.87	93	4.166	133	1.365

14	79.26	54	15.30	94	4.040	134	1.331
15	75.71	55	14.74	95	3.920	135	1.297
16	72.33	56	14.22	96	3.803	136	1.266
17	69.13	57	13.71	97	3.691	137	1.234
18	66.08	58	13.23	98	3.583	138	1.204
19	63.18	59	12.77	99	3.478	139	1.174